University of Glasgow
School of Engineering

Power Engineering 3 ENG3041

Lab 1: Single & Three Phase Systems Laboratory

Version 2

Student Name: **Daniel Borkovec**

Matric No: **2941124B**

Introduction

Understanding single and three phase power systems with resistive, inductive and capacitive loads is fundamental to the Power Engineering 3 course. This laboratory has been designed to give you the ability to measure voltages, currents and power in a variety of single and three phase circuits. By the end of the session you will hopefully have a better understanding of the following:

- Single phase voltage, current, power factor and power relationships for resistive, capacitive and complex loads
- Three phase balanced Star connected load: phase power measurement and total supply power
- Three phase unbalanced Star connected load: total supply power measurement using the 3 wattmeter and 2 wattmeter methods

Assessment

The 3 laboratory sessions account for 10% of your final mark in Power Engineering 3. You should have with you a bound laboratory book (with graph paper). Record ALL your measured results and any subsequent calculations in your bound laboratory book during the laboratory session, also fill out the necessary results in this lab sheet (this makes it easy for me to check your results during the session).

At some point after the lab session you need to write up the results (neatly!) and complete the associated analysis/theory sections before handing in your lab books before the end of the semester.

Note that you will not be assessed during the laboratory session so please communicate freely with supervisor/demonstrators – we are here to help you obtain accurate results and to help with any questions you have relating to the associated theory.

Definitions of Power Factor (PF) & Real Power (P)

Considering the example circuit shown on figure 1 and the associated phasor diagram, Power Factor and Real Power (measured in Watts) are defined as follows:

Power Factor (PF) = CosΦ where Φ is the angle between V_S and I_S

Real Power (P) = $V_S.I_S.\cos\Phi$ where V_S and I_S are rms values

Note: Real Power (P) and Power Factor are related to Apparent Power (S) and Reactive Power (Q) through the power triangle as shown on Figure 2

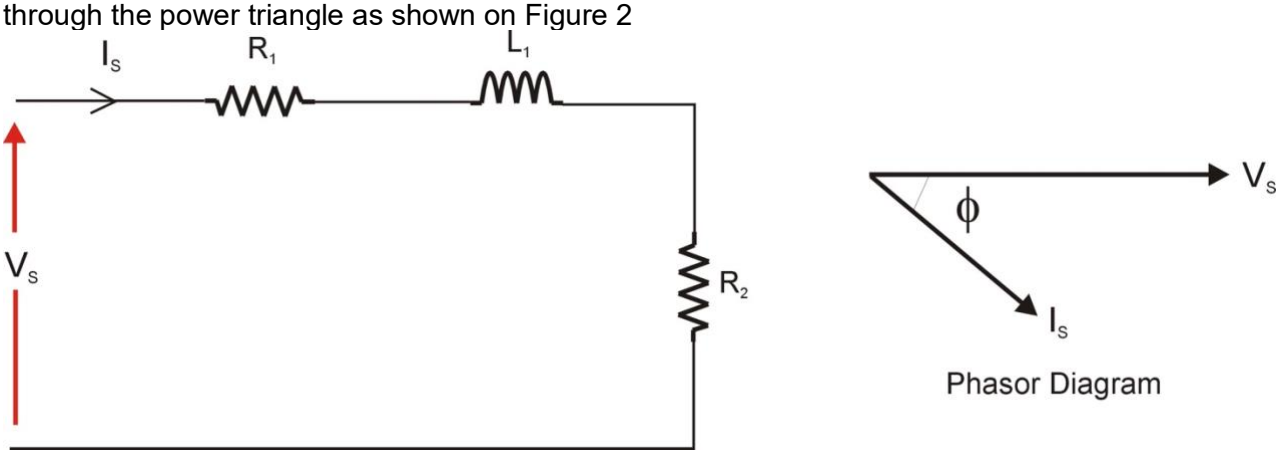

Figure 1: Example Circuit + Phasor Diagram

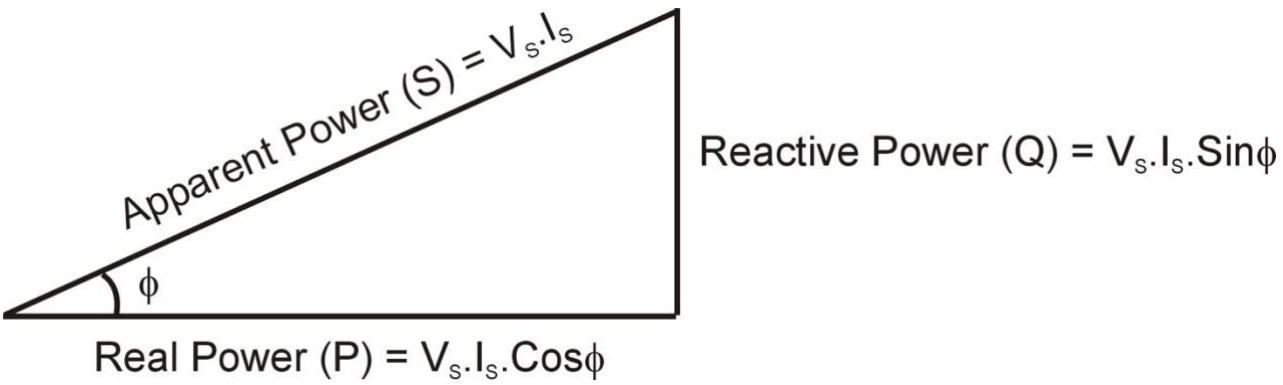

Figure 2: Power Triangle

Using the Voltech P1000+ Single Phase Power Analyser

During this laboratory session you will rely heavily on results from the Voltech P1000+ Power Analyser, an example of modern high tech electrical test equipment.

What does the Voltech Power Analyser measure?

It measures instantaneous voltage and current, and from these it calculates and displays the following:

- Voltage (rms)
- Current (rms)
- Real Power (W)
- Frequency (Hz)
- Power Factor

You can scroll the display to show all of these values by using the scroll buttons shown on figure 3. During this laboratory session you will use all of these except frequency (we

assume that the supply frequency is 50Hz mains). Using these measurements you will also be able to calculate the following parameters:

- Apparent Power (VA)
- Reactive Power (VAr)

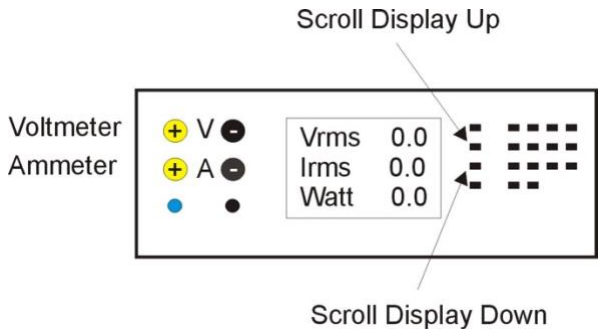

Figure 3: P1000 Scroll Buttons

The key to success in using the P1000 Power Analyser is having a good understanding of how to connect the leads to measure voltage and current. With reference to figure 3 the two voltage leads are input on the top 2 connections on the left of the P1000 (positive input to the left and negative to the right). The current leads are input on the 2 connections below these with the same polarity. Note that the polarity (+ and – inputs) of the connections is not important when we only want to measure the magnitudes of the voltage and current but it will be important when it comes to measuring power factor so make sure you understand this before proceeding – any problems then ask for (free!) assistance from lab demonstrator/supervisor. Have a look at figure 4 for polarity conventions:

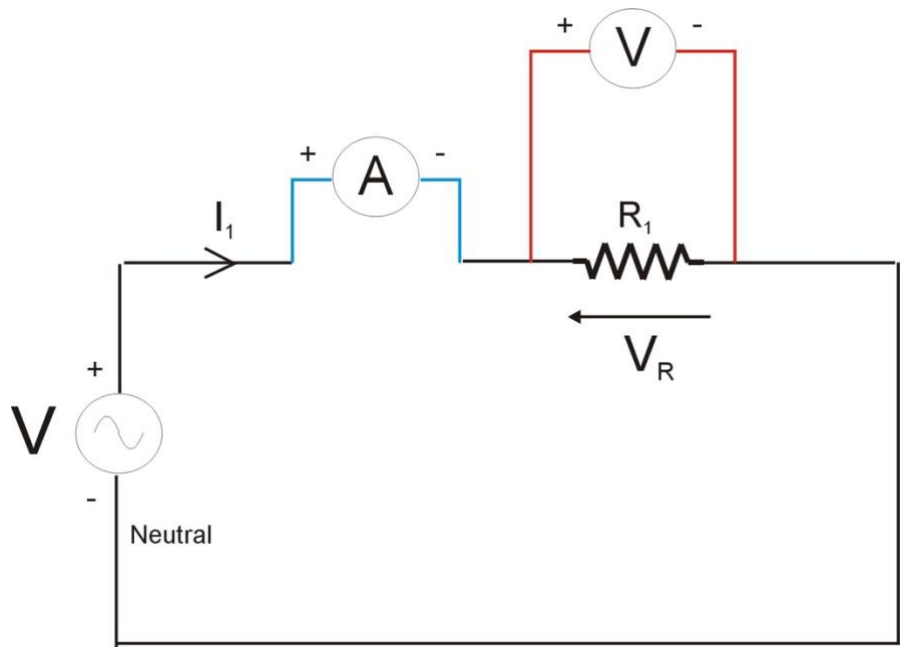

Figure 4: Voltage & Current Measurement Polarity

To help understand how to connect these voltage and current leads to the circuit to be tested consider the RC circuit shown on figure 5. The key concept to remember is that we measure current *through* a component and voltage *across* a component, therefore for example if you want to measure the current through resistor R_2 and the voltage across it then the Power Analyser would be connected as shown in figure 6.

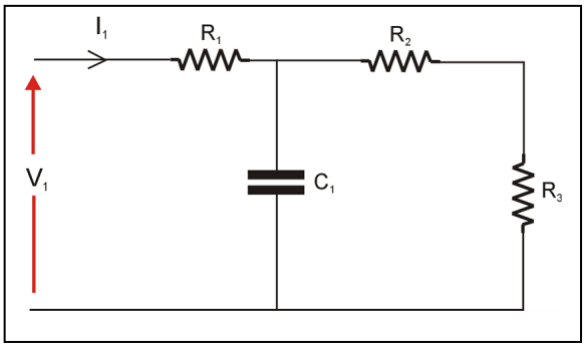

Figure 5: Simple RC Circuit

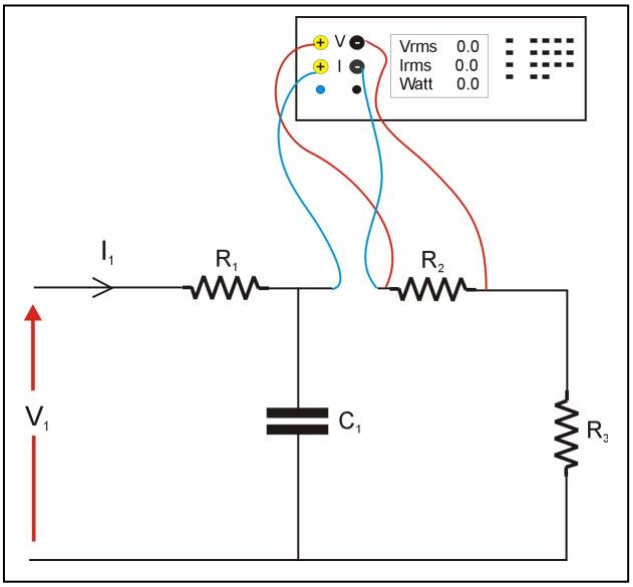

Figure 6: Using the Power Analyser

Measurement 'Driving Test'

As 'proof' of your understanding indicate on the following table the required voltmeter or ammeter placement on Figure 7 (identified by its letter) to measure the following voltages and currents:

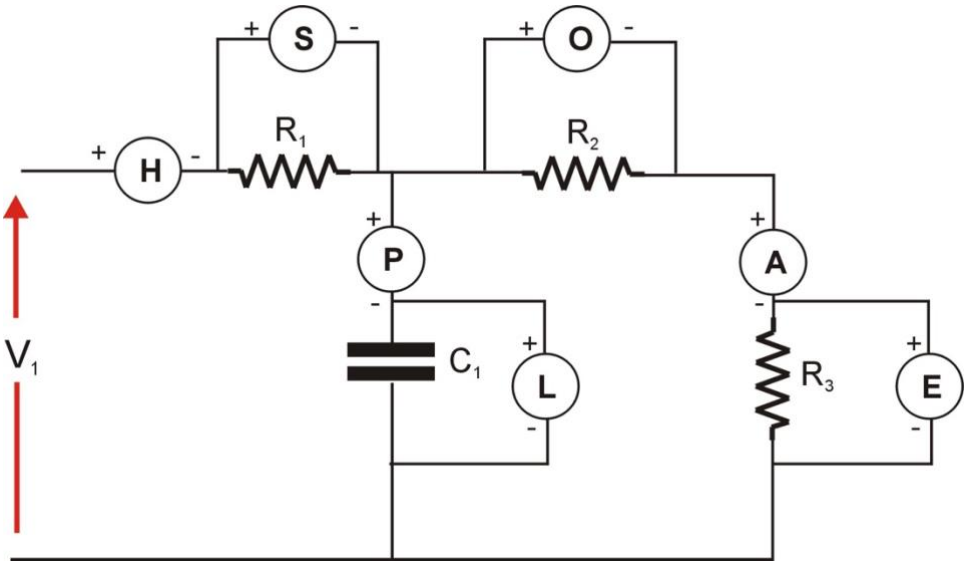

Figure 7: Example Meter Placement

	Meter Requirement	Meter (eg P,E,A etc)
Q1	Measure current through R1	H
Q2	Measure voltage across R2	O
Q3	Measure current through C1	P
Q4	Measure voltage across R3	E

Show answer to laboratory supervisor before continuing.

Experiment 1: Single Phase Resistive Load

With the power supply turned off, select and connect a 200Ω resistor (Experiment 2 resistor box) to a single phase of the 3 phase 42V power supply as shown on figure 8.

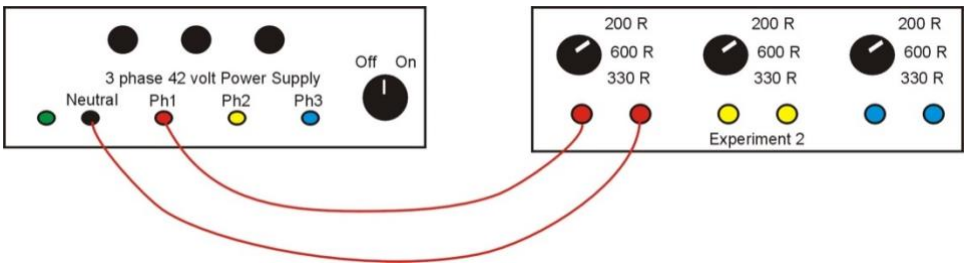

Figure 8: Resistive Load

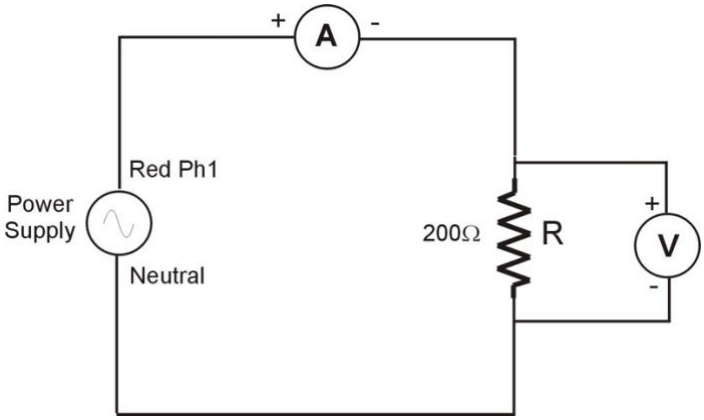

Figure 9: Wiring Diagram

Now modify the connections to include the Power Analyser measuring the resistor current and voltage. Use the wiring diagram on Figure 9 as a guide. After switching on the power supply determine the following (note: watch out for values which are expressed in milli eg milliamps).

Experimental tests:

Parameter	Value	Units
V_R	**25.75**	V
I_R	**0.127**	A
Power Factor	**1.000**	
Real Power (P)	**3.322**	W

Verify the Real Power Measurement by calculating the I^2R power loss in the circuit:

$P = R * IR^2 = 200 * (0.127)^2 = 3.23$ W

Results are in agreement within expected deviations due to realistic conditions.

Experiment 2: Single Phase Resistive + Capacitive Load

With the power supply turned off, select and connect a 100Ω resistor (Experiment 1 box) in series with a 25μF capacitor (3 Phase Capacitor Bank) to a single phase of the 3 phase 42V power supply as shown on figure 10. Draw a wiring diagram (similar to Figure 9) for this new load configuration including the PM1000 measuring; the current through the resistor and capacitor, and the voltage across both the resistor **and** the capacitor.

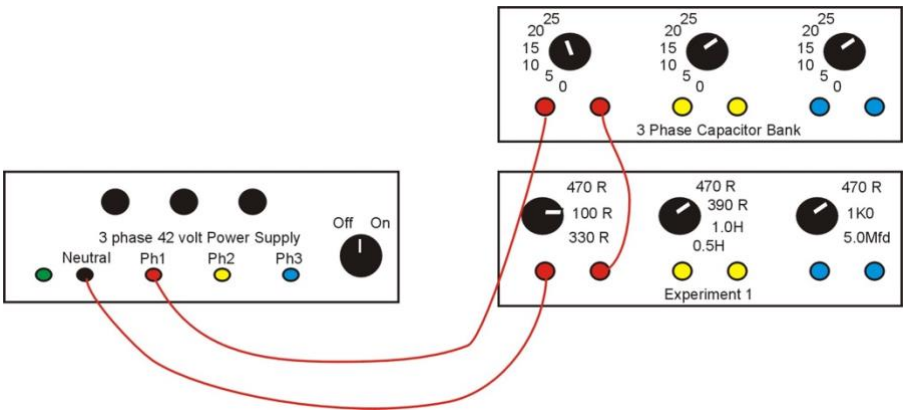

Figure 10: RC Series Load

Wiring Diagram:

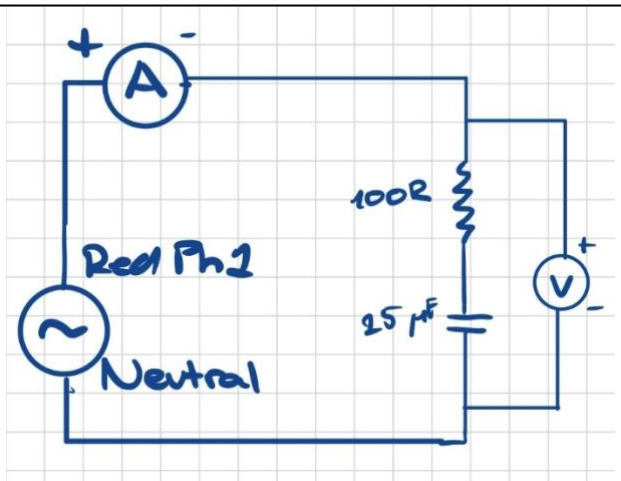

Switch on the power supply and determine the following:

Experimental results:

Parameter	Value	Units
V_{ZT}	**25.82**	V
I_{ZT}	**0.157**	A
Power Factor	**0.616**	
Real Power	**2.505**	W

Verify the Real Power Measurement by calculating the I^2R power loss in the circuit:

$P = R * IR^2 = 100 * (0.157)^2 = 2.465$ W

Three Phase Systems – Balanced Loads

The majority of long distance AC power generation and transmission uses a 3 phase system. The three phase generator voltages are equal in magnitude but are phase shifted by 120º (see figure 11). The basic idea is that we can connect three phase loads to the three phase generator in one of two ways; Star or Delta. A star connected load is shown on figure 12 and a delta connected load is shown on figure 13, with all phase and line voltages and currents shown. In our analysis we will assume that the phase voltages (V_{RN} etc) are equal in magnitude and 120º apart, and the line voltages (V_{RY} etc) are equal in magnitude and 120º apart. A Balanced load condition is when the three load impedances are equal, therefore for a Star connected load $Z_{RS} = Z_{YS} = Z_{BS}$, and for a Delta connected load $Z_{RY} = Z_{YB} = Z_{BR}$. For a balanced load the respective line currents (I_R etc) are equal in magnitude and 120º apart, and the load phase currents (I_{RY} etc, Delta only) likewise.

The result of this is that for a balanced 3 phase load we need only measure voltage, current, power factor and power in one phase as the power in the three phases is identical and total power is simply three times the phase power.

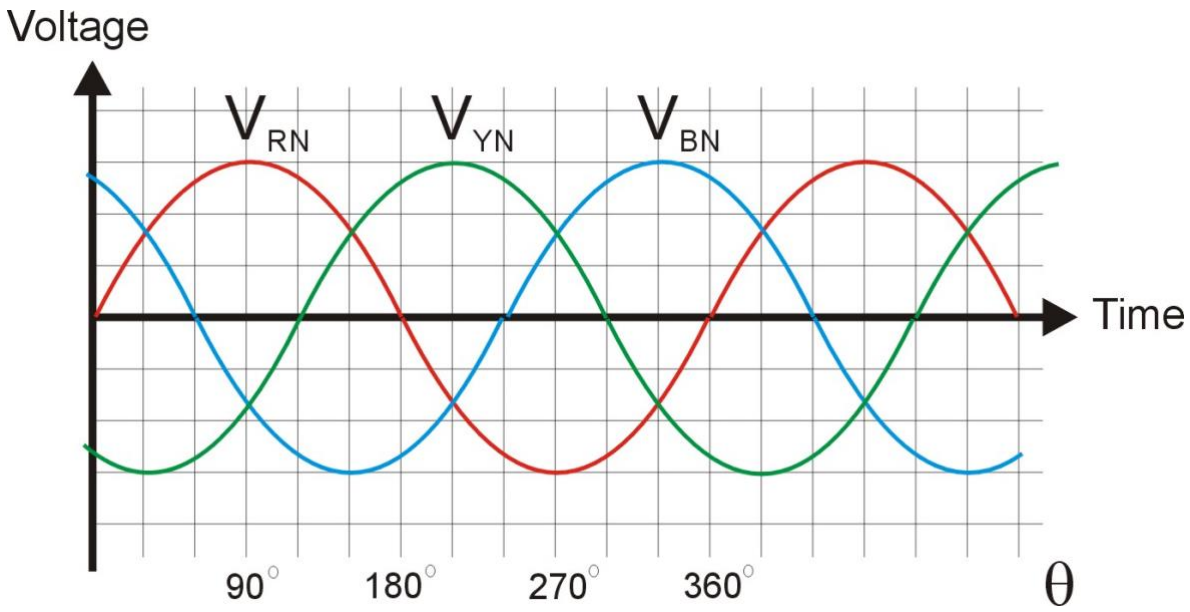

Figure 11: Three Phase Voltage Supply

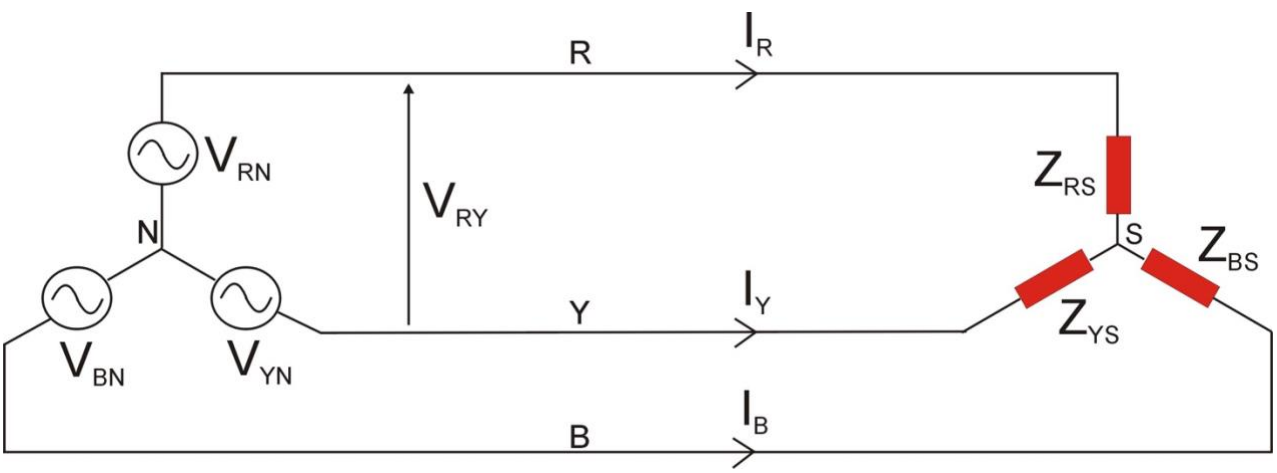

Figure 12: Star connected (balanced) load

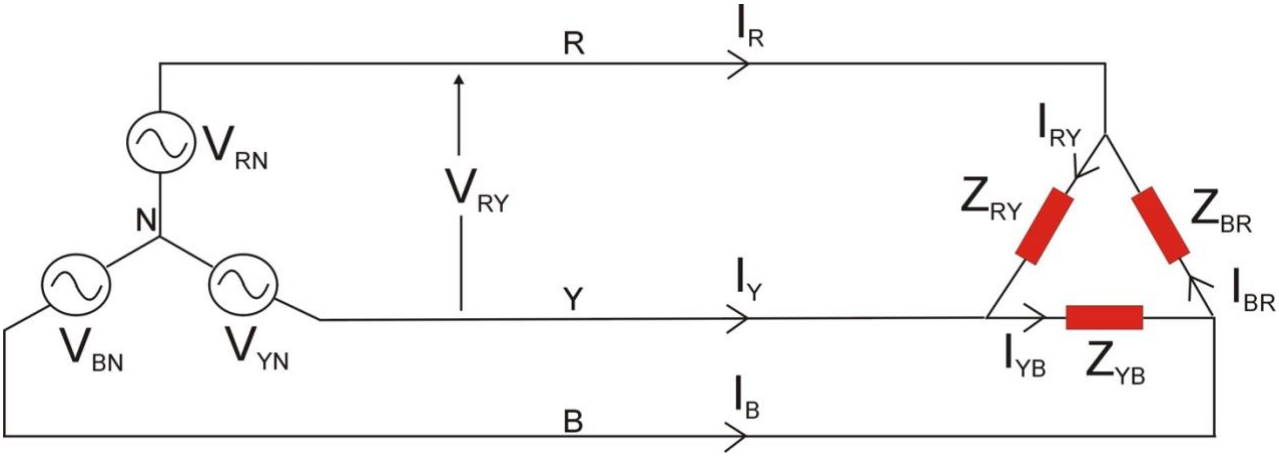

Figure 13: Delta connected (balanced) load

Parameter			
Phase Voltages	V_{RN}	V_{YN}	V_{BN}
Line Voltages	V_{RY}	V_{YB}	V_{BR}
Line Currents	I_R	I_Y	I_B
Load Phase Currents (Delta Only)	I_{RY}	I_{YB}	I_{BR}

Experiment 3: Balanced 3 Phase Star connected load

We will now use all three outputs of the 3 phase 42Volt Power Supply. The three phase voltages are output on the red, yellow and blue terminals and the neutral point is also available on the black terminal (but not connected to the load!).

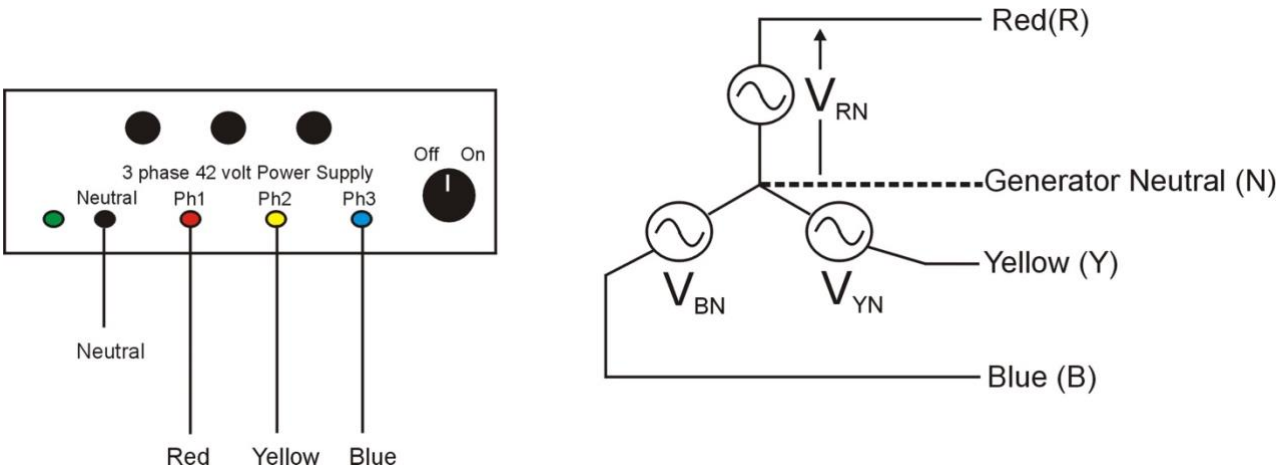

Figure 14: 3 Phase Power Supply

Now wire up (using colour coded wiring would be beneficial) a balanced Star connected load consisting of a 470Ω resistor in series with a 15μF capacitor as per figures 15.

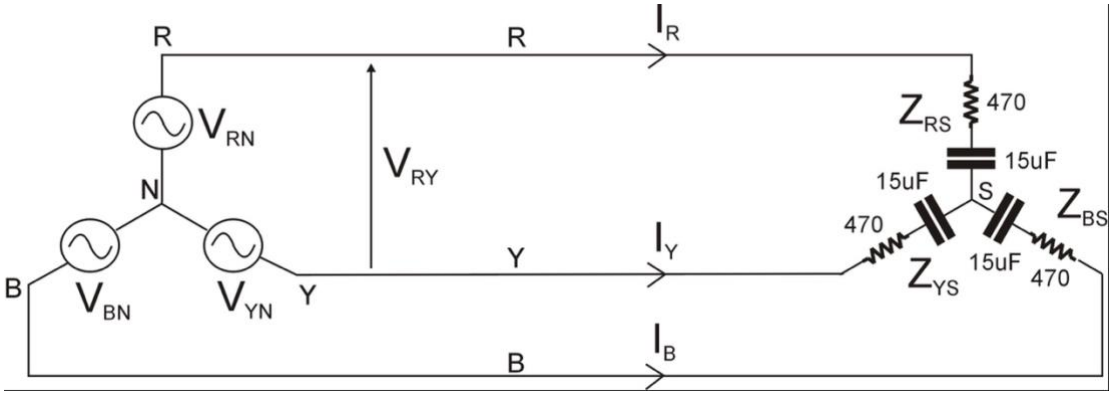

Figure 15: Star connected RC load

A useful check to see if the wiring is correct is to measure the voltage between the load star point and the generator neutral (V_{SN}). If the load is perfectly balanced then V_{SN} = 0V but due to resistor tolerances it will measure a small voltage (typically less than 0.5V for this experiment). Connect the Power Analyser voltage leads to points (S) and (N) respectively and verify the voltage is as expected:

Measured	V_{SN}	**0.401 V**

In power systems the utility companies are generally interested in measuring and monitoring the Phase Power output from the three phase supply. To do this connect the Wattmeter to measure the RED Phase Voltage V_{RN} and the RED Line Current I_R and record the results:

Experimental results:

Parameter	Value	Units
V_{RN}	**26.31**	V
I_R	**0.050**	A
Power Factor	**0.911**	
Real Power	**1.206**	W

From this determine the total real power taken from the 3 phase supply:

Total Real Power	**3(1.206) =3.618**	**W**

Verify the Real Power Measurement by calculating the TOTAL I^2R power loss in the circuit:

$P = 3 * IR^2 * R = 0.050^2 * 470 * 3 = 3.525$ W

Results are in agreement within expected deviations due to realistic conditions.

Three Phase Systems – Unbalanced Loads

This is the condition where the three load impedances are no longer equal and therefore the output power from each of the three phases is now no longer equal. As a result we can no longer simply measure the power in one phase and then multiply this by 3. There are two methods to measuring power in unbalanced systems (note: these methods are also valid for balanced load conditions):

1. 3 Wattmeter Method
2. 2 Wattmeter Method

(the obvious advantage of the latter is that in an actual permanent monitoring setup we now require only 2 wattmeter's instead of 3)

Experiment 4: Unbalanced 3 Phase Star connected load – 3 Wattmeter Method

Connect the unbalanced star connected circuit shown on Figure 16. In the three wattmeter method a wattmeter is placed on each of the three phases (we will have to make do with using one wattmeter in each location in turn though!).

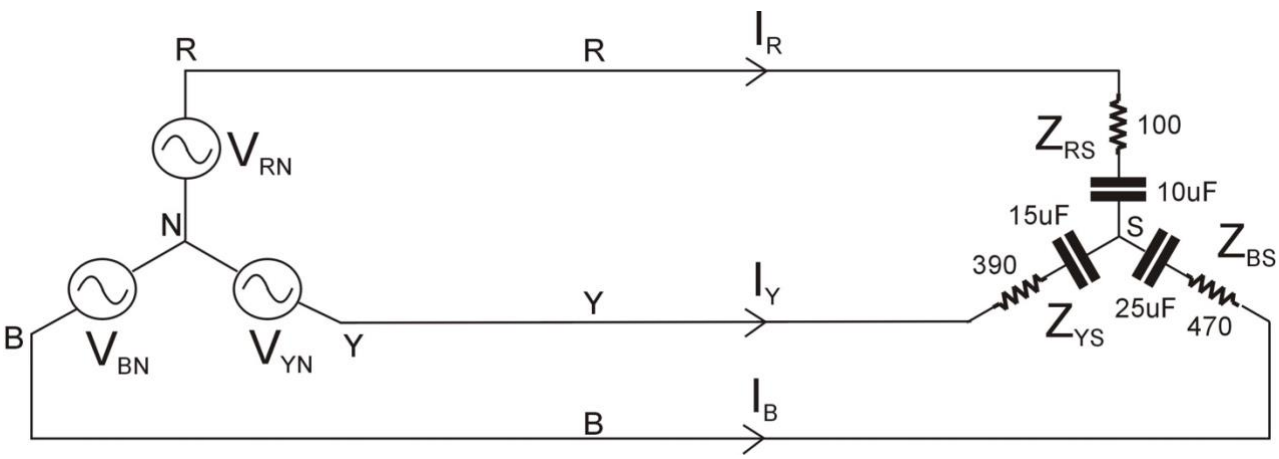

Figure 16: Star connected unbalanced RC load

Before making the actual wattmeter reading measure the voltage V_{SN}:

Measured	V_{SN}	**8.378 V**

Now wire up the Power Analyser to measure V_{RN} and I_R and record the results:

V_{RN}		I_R		Real Power (P_{W1})		Power Factor
(V)		(A)		(W)		
23.89		**0.070**		**0.498**		**0.298**

Wire up the Power Analyser to measure V_{YN} and I_Y and record the results:

V_{YN}		I_Y		Real Power (P_{W2})		Power Factor
(V)		(A)		(W)		
34.49		**0.0773**		**2.341**		**0.879**

Wire up the Power Analyser to measure V_{BN} and I_B and record the results:

V_{BN}		I_B		Real Power (P_{W3})		Power Factor
(V)		(A)		(W)		
22.69		**0.0460**		**1.004**		**0.964**

The Total Real Power supplied by the three phase generator is $P_{W1} + P_{W2} + P_{W3}$:

Total Real Power	**3.842**	(W)

Experiment 5: Unbalanced 3 Phase Star connected load – 2 Wattmeter Method

We now want to repeat the measurement of total 3 phase power in the circuit shown on Figure 16 but this time using the 2 wattmeter method.

The connections for the two wattmeters are shown on Figure 17.

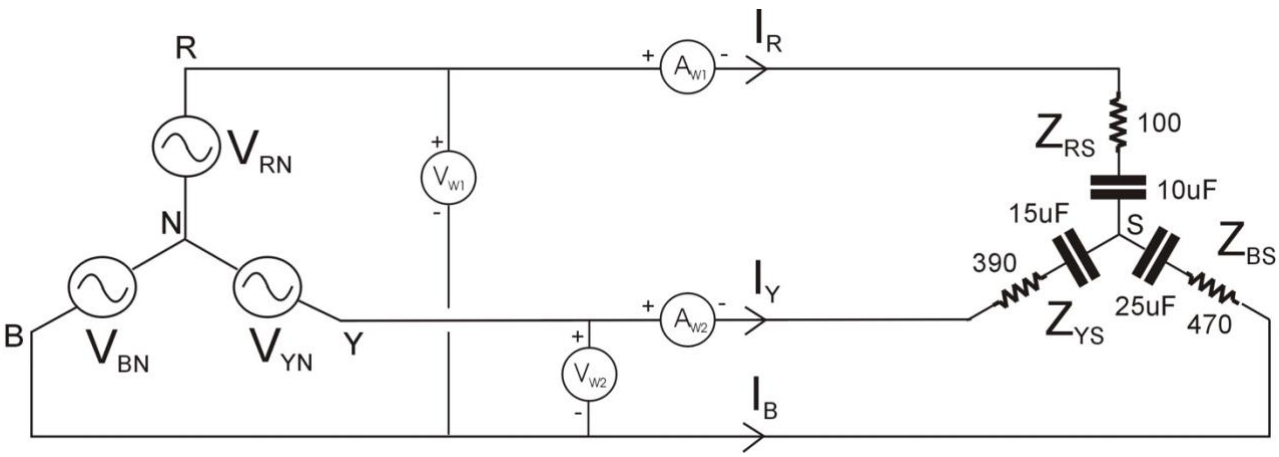

Figure 17: 2 Wattmeter Placement

Wire up the Power Analyser to measure V_{RB} and I_R and record the results:

V_{RB}		I_R		Real Power (P_{W1})		Cos Φw1
(V)		(A)		(W)		
45.67		**0.0701**		**0.336**		**0.104**

Wire up the Power Analyser to measure V_{YB} and I_Y and record the results:

V_{YB}		I_Y		Real Power (P_{W2})		Cos Φw2
(V)		(A)		(W)		
44.48		**0.0773**		**3.516**		**0.999**

The Total Real Power supplied by the three phase generator is $P_{W1} + P_{W2}$:

Total Real Power	**3.852**	(W)

Verify the Real Power Measurements by calculating the TOTAL I^2R power loss in the circuit:

$P = (IR^2 * R) + (IY^2 * R) + (IB^2 * R)$

$P = (\mathbf{0.070^2 * 100) + (0.0773^2 * 390) + (0.0460^2 * 470)}$

P = 3.815 W

Comment on how the results from the two different methods compare.

Both the 3 Wattmeter and 2 Wattmeter methods arrive at almost identical power readings, being **3.842W** and **3.852 W**, respectively. The difference is negligible. Thus, both methods may be considered accurate and reliable in terms of power readings. The slight discrepancy between the two values likely stems from finite measurement resolution, rounding to three significant figures during calculation and human error during measurements, among other factors introducing slight errors.

The main difference between the two methods is the number of readings required to achieve a full power reading. Unlike the 3 Wattmeter method which needs phase voltage and line current readings of all three lines, the 2 Wattmeter method uses line voltage instead to only require two-line voltage and line current readings. The 2 Wattmeter methods is hence superior in number of readings to achieve the result, saving on time and measuring tools. Overall, both methods achieve the same result, with both the 3-wattmeter and 2-wattmeter methods being valid for both balanced and unbalanced 3-phase systems.

Post Laboratory Theoretical Calculations and Analysis:

For the subsequent calculations assume a 26.8V/50Hz supply (phase) voltage.

Experiment 1:

1. Calculate the supply current (I_S) for the given load
   Is = Vs/R = 26.8V/200 Ohms = 0.134 A ∠ 0
2. Calculate the Real Power, Apparent Power and Reactive Power.
   $P = I^2R = (0.134)^2 * 200 = 3.59$ W.
   S = V * I = 26.8 * 0.134 = 3.59 VA.
   Q = 0 VAr (only resistors, angle of S is zero)
3. Draw the resultant Phasor Diagram indicating the supply voltage and current

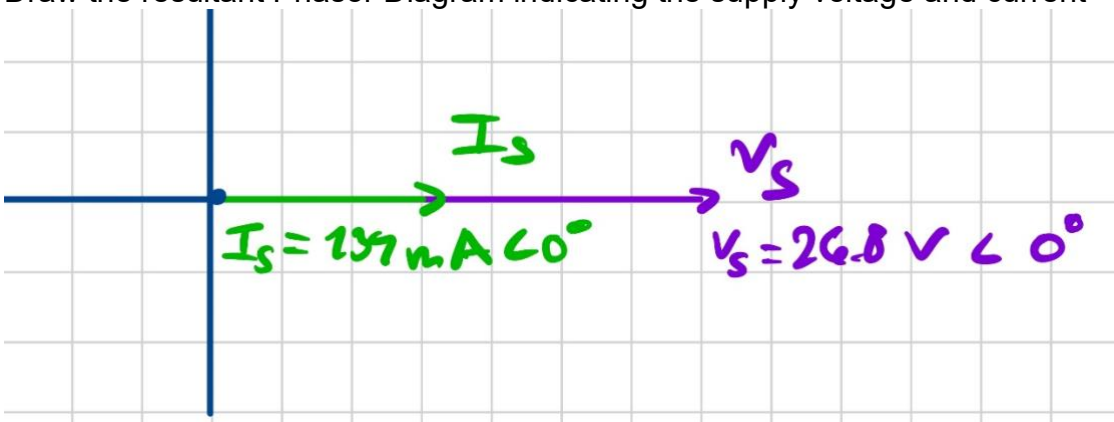

4. Create a table comparing the measured and calculated results and comment.

	Measured	Calculated
Supply Voltage - Vs	25.75 V	26.8 (given) V
Supply Current – Is	0.127 A	0.134 A
Power Factor – cos(phi)	1.000	1.000
Real Power – P	3.32 W	3.59 W

The experimental data and calculations are in alignment with each other, supporting the experiment's methodology and accuracy. There are slight discrepancies, such as the current being off by about 7 mA between the measured and calculated values, however, this can be explained using multiple factors. For one, the resistors inside the real circuit have tolerances, meaning the resistor in the real circuit may not be 200 Ohms perfectly. Moreover, the measurement instruments have a finite resolution, and taking readings by simply noting down fluctuating instrument readings introduces human error. Overall, the two agree.

Experiment 2:

1. Calculate the supply current (I_S).

   $Xc = 1/wC = 1/(2*pi*25 \times 10^{-6}) = 127.3$ Ohms
   Z = R – jXc = 100 – j127.3 Ohms
   $| Z | = sqrt(100^2 + 127.3^2) = 161.9$ Ohms
   Z = 161.9 ∠ -51.8 deg
   Is = Vs / Z = (26.8) / (161.9 ∠ -51.8 deg) = 0.166 A ∠ 51.8 deg

2. Calculate the Power Factor, Real Power, Apparent Power and Reactive Power.

   PF = cos(phi) = cos(51.8 deg) = 0.618 Leading (capacitive load)

$P = Is^2R = 0.166^2*100 = 2.76$ W
$S = V * Is = 26.8 * 0.166 = 4.45$ VA
$Q = sqrt(S^2 – P^2) = sqrt(4.45^2 – 2.76^2) = 3.49$ VAr

3. Draw the resultant Phasor Diagram indicating (to scale) the supply voltage, supply current, resistor voltage and capacitor voltage.
4.

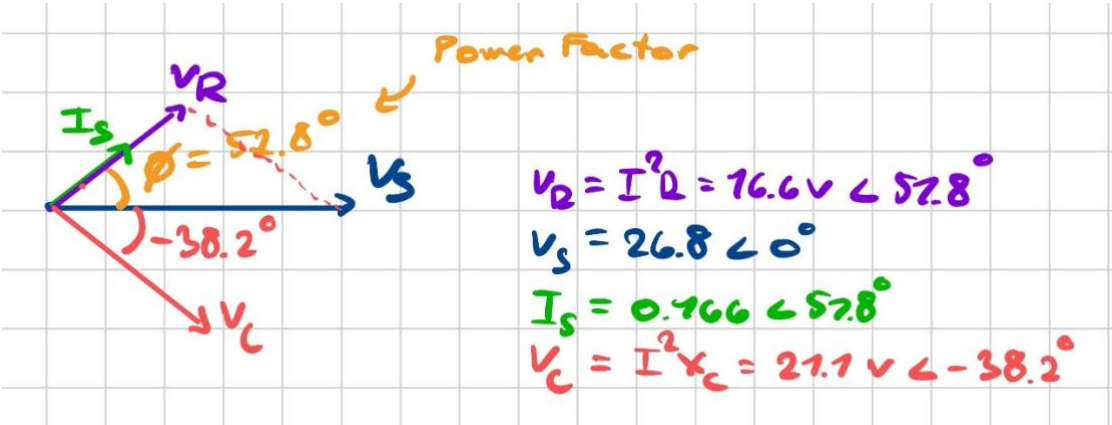

5. Create a table comparing the measured and calculated results and comment.

	Measured	**Calculated**
Supply Voltage - Vs	25.82 V	26.8 (given) V
Supply Current – Is	0.157 A	0.166 A
Power Factor – cos(phi)	0.616	0.618
Real Power – P	2.505 W	2.76 W

Once again, the experimental data and calculations are in accordance with one another. The measured supply current is again slightly lower than the predicted one, which is likely a result of the imperfect resistor tolerances, but also the non-zero resistance of the connecting wires. This would also explain the slightly larger discrepancy between the calculated and real power, as the wires would also have a slight resistive power dissipation. Overall, the results are again mostly in agreement, supporting the theoretical calculations used to analyse real-world circuitry.

Experiment 3:

1. Calculate the line voltage V_{RY}.

   VRY = sqrt(3) * VRN = sqrt(3) * 26.8V = 46.4 V

2. Calculate the Red line current.

   ZR = R + 1/(jwC) = 470 -j212 Ohms = 515.6 ∠ -24.3 deg
   IR = VRN / ZR = 26.8 / (515.6 ∠ -24.3 deg) = 0.052 ∠ 24.3 deg

3. Calculate the Power Factor of each phase.

   The star loads are balanced, meaning all voltages and current are equal. Hence, all Power Factors are equal:

   PF = cos(phi) = cos(24.3 deg) = R/Z = 0.911

4. Calculate the per phase Real Power, Apparent Power and Reactive Power.

Once again, all Power values apply to all phases as the loads are balanced:

$S = V * I = 26.8 * 0.052 = 1.39$ VA
$P = S * PF = I^2R = 1.27$ W
$Q = S * \sin(phi) = sqrt(S^2 – P^2) = sqrt(1.39^2 – 1.27^2) = 0.572$ VAr

5. Draw the resultant 3 phase Phasor Diagram indicating all phase and line voltages and the 3 line currents.

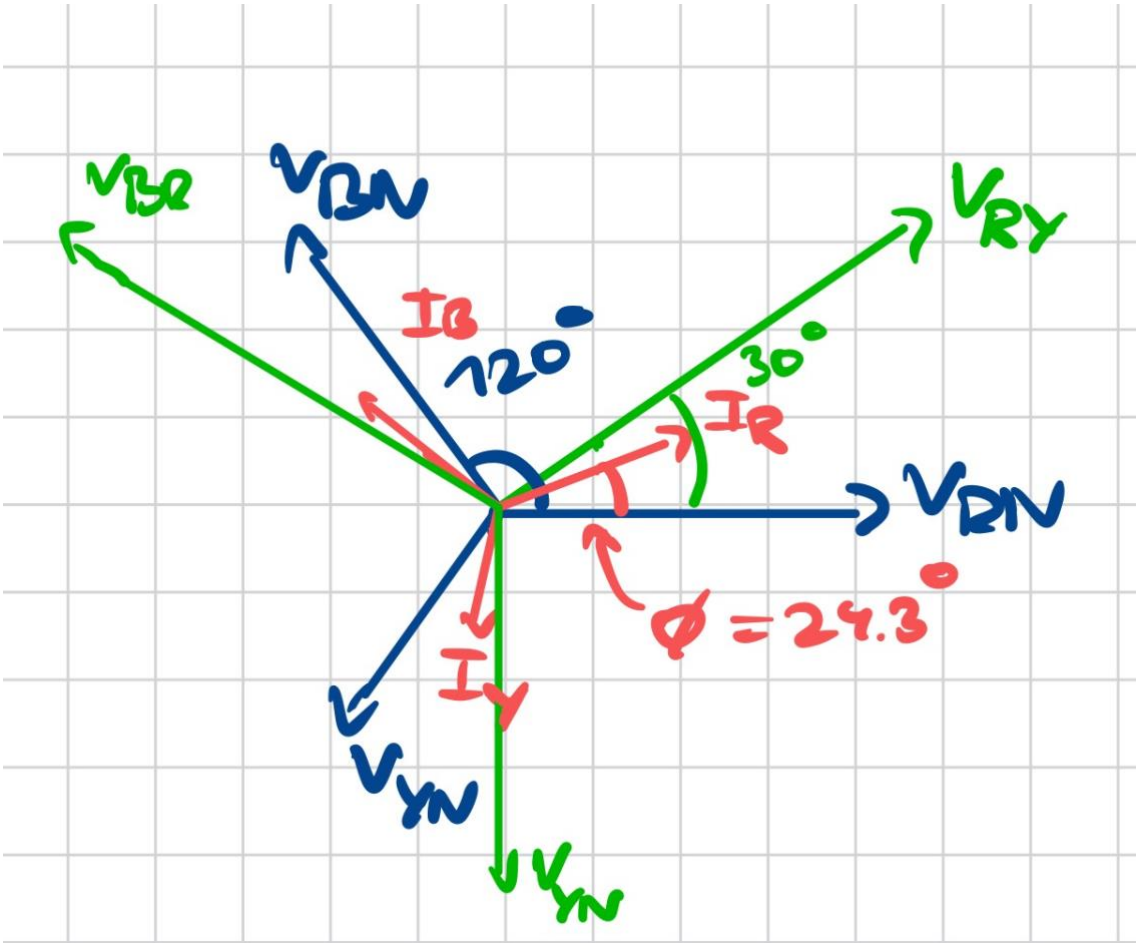

Experiment 4:

1. Calculate the total 3 phase power from the supply for the unbalanced load connected in DELTA instead of star.
2. Confirm these using calculations based on the 2-wattmeter method

Experiment 5:

1. Calculate the total 3 phase power from the supply for the unbalanced load connected in DELTA instead of star.
2. Confirm these using calculations based on the 2-wattmeter method

Experiment 4 and 5 share background calculations, and thus are both included in the section below:

Experiment 4 & 5 shared background calculations:

Using VL = sqrt(3) * PH ∠ 30 deg, then:

V_{RY} = 46.4V ∠ 30 deg
V_{YB} = 46.4V ∠ -90 deg
V_{BR} = 46.4V ∠ 150 deg

Using Z = R – jXc; where Xc = 1/wC, then:

$Z_{RY} = 100 – j*1/(2\pi*50*10*10^{-6}) = 333.6 \angle -72.6$ deg
$Z_{YB} = 390 – j*1/(2\pi*50*15*10^{-6}) = 444 \angle -28.6$ deg
$Z_{BR} = 470 – j*1/(2\pi*50*25*10^{-6}) = 486.9 \angle -15.2$ deg

For a delta connection, phase voltage equals line voltage, hence phase currents are calculated using line voltages. $I_{Phase} = V_{Line} / Z$ for delta, then:

I_{RY} = (46.4V ∠ 30 deg) / (333.6 ∠ -72.6 deg) = 0.139 ∠ 102.6 deg
I_{YB} = (46.4V ∠ -90 deg) / (444 ∠ -28.6 deg) = 0.105 ∠ -61.4 deg
I_{BR} = (46.4V ∠ 150 deg) / (486.9 ∠ -15.2 deg) = 0.0953 ∠ 165.2 deg

Using KCL on the delta connected loads:

$I_R = I_{RY} – I_{BR}$ = 0.127 ∠ 60.9 deg
$I_Y = I_{YB} – I_{RY}$ = 0.241 ∠ -70.6 deg
$I_B = I_{BR} – I_{YB}$ = 0.184 ∠ 140.7 deg

Experiment 4, The 3-Wattemeter power result indicates a total power of:

$P = I_{RY}^2R_{RY} + I_{YB}^2R_{YB} + I_{BR}^2R_{BR} =$
= 1.94W + 4.26W + 4.27W =
= 10.50 W

Experiment 5, The 2-Wattmeter method indicates a total power of:

$P = V_{RB} * I_R * \cos(\text{theta}_1) + V_{YB} * I_Y * \cos(\text{theta}_2)$
= 46.4 * 0.127 * cos(-30 – 60.9) + 46.4 * 0.241 * cos(-90 – (- 70.9))
= **10.47W.**

Both results are very close to each other, thus confirming the validity and accuracy of both methods.

Wenjuan Song
January 2026

University of Glasgow
School of Engineering

Power Engineering 3 ENG3041

Lab 2: Single Phase Transformer Laboratory

Version 4

Student Name: **Daniel Borkovec**

Matric No: **2941124B**

Introduction

Transformers are one of the principle reasons why we have AC Power Networks as opposed to DC systems. Their ability to provide a (relatively!) cheap and reliable means of converting AC voltage levels results in high efficiency AC power transmission. In this series of experiments you will investigate the main features of a small single phase transformer, and by the end of the laboratory you should have a good understanding of the following:

- The Ideal Transformer equations
- The equivalent circuit for a practical single phase transformer
- The Open Circuit & Short Circuit Tests to determine equivalent circuit parameters
- Using the equivalent circuit to predict transformer performance
- Transformer Voltage Regulation & Efficiency under load
- The Transformer Voltage and Current Limits

Assessment

The 3 laboratory sessions account for 10% of your final mark in Power Engineering 3. You should have with you a bound laboratory book (with graph paper). Record ALL your measured results and any subsequent calculations in your bound laboratory book during the laboratory session, also fill out the necessary results in this lab sheet (this makes it easy for me to check your results during the session).

At some point after the lab session you need to write up the results (neatly!) and complete the associated analysis/theory sections before handing in your lab books before the end of the semester.

Note that you will not be assessed during the laboratory session so please communicate freely with supervisor/demonstrators – we are here to help you obtain accurate results and to help with any questions you have relating to the associated theory.

Experiment 1: Determining the Transformer Turns Ratio

The equivalent circuit for an **Ideal** Transformer is shown on figure 1 where N_P is the number of turns on the primary winding and N_S is the number of turns on the secondary. The corresponding relationships between primary and secondary voltages and currents are as follows:

$$\frac{V_P}{V_S} = \frac{N_P}{N_S} \qquad \frac{I_P}{I_S} = \frac{N_S}{N_P}$$

N_P/N_S is termed the Turns Ratio

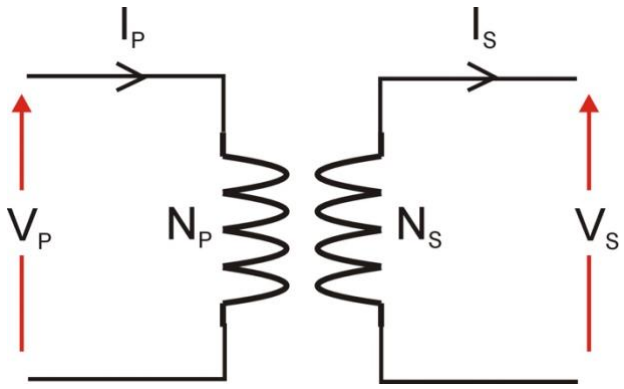

Figure 1: The Ideal Transformer

Clearly the Turns Ratio is very important in defining the operation of a transformer (note: it is used in the equivalent circuit for the practical transformer as well!) and in this first experiment we will determine this turns ratio from measurement:

The experimental setup for this experiment is shown on figure 2. The Turns Ratio can be calculated by measuring the Open Circuit Secondary Voltage (V_{SOC}) at a given Primary Voltage (V_P) and then using the voltage ratio (V_P/V_{SOC}) to calculate the turns ratio.

Experimental Procedure:

1. Set the AC power supply voltage to zero (**Voltage Adjust** should be turned fully counter-clockwise until it hits the end-stop).
2. Turn on the AC power supply.
3. Connect the Power Meter to the Primary circuit monitoring point (PM) on the transformer.
4. Adjust AC power supply voltage (using Voltage Adjust) until approximately 30V is displayed on the Power Meter.
5. Record the transformer Primary voltage (V_P) displayed on the Power Meter.
6. Connect the Power Meter to the Secondary circuit monitoring point (SM) on the transformer.
7. Record the transformer Open Circuit Secondary voltage (V_{SOC}) displayed on the Power Meter.

8. Adjust the AC power supply voltage to zero.
9. Turn off the AC power supply.

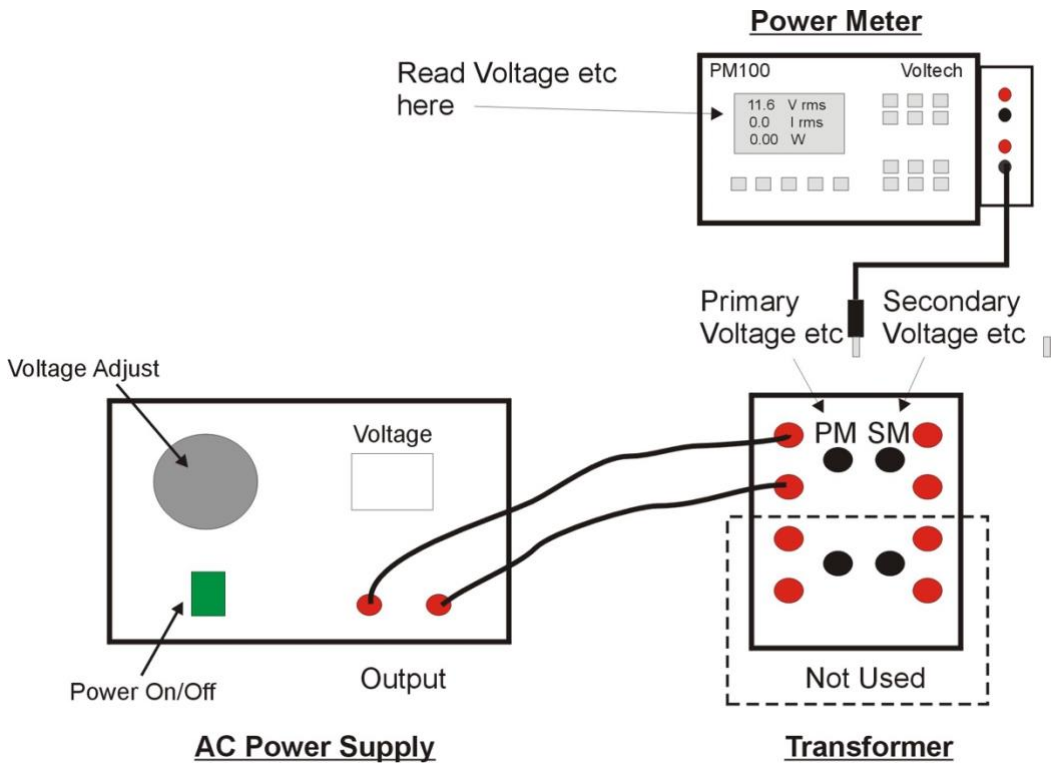

Figure 2: Experiment 1 Setup

Using the measured values of primary and secondary voltages, and the Ideal Transformer voltage equation shown above determine the transformer Turns Ratio:

Measured Parameter	**Value**	**Units**
Primary Voltage (V_P)	**30.18**	**V**
Secondary Voltage (V_{SOC})	**11.23**	**V**

Calculated Parameter	**Value**	**Units**
Turns Ratio	30.18/11.23 = **2.69**	Unitless

The turn ratio indicates a step-down transformer.

Experiment 2: Determining the practical Transformer Equivalent Circuit

As will be outlined in the lectures the practical transformer has an equivalent circuit which takes into account issues such as wiring copper loss, leakage inductance, magnetising current and iron loss. The complete equivalent circuit for a transformer is shown on figure 3.

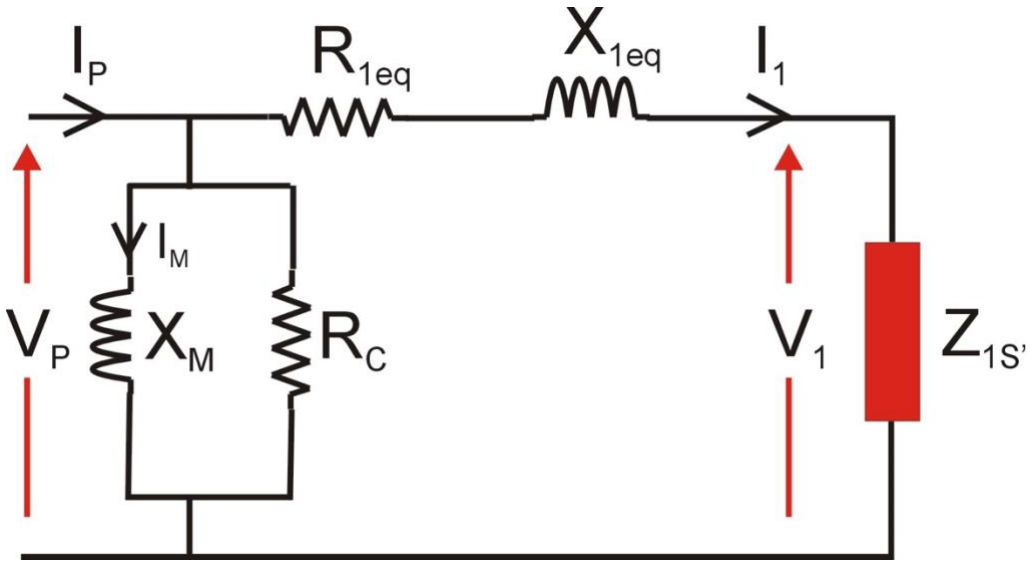

Figure 3: Transformer Equivalent Circuit

The purpose of the next couple of tests is to determine values for the transformer parameters R_{1eq}, X_{1eq}, X_M and R_C

Experiment 2A: Open Circuit Test (to determine X_M and R_C)

In this experiment the secondary winding is open circuit ($Z_{1S'}$ is Open Circuit) and therefore $I_1 = 0A$ and the equivalent circuit simplifies to that shown on figure 4.

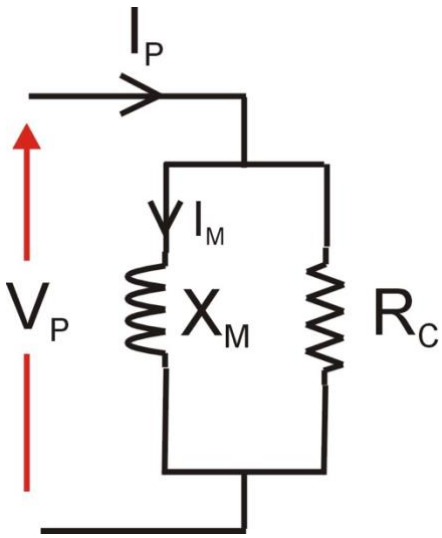

Figure 4: Open Circuit Test Equivalent Circuit

Notice that we have one resistive component R_C and one inductive component X_M. By knowing (hopefully!) that **REAL** Power is associated with the resistance and **REACTIVE** power is associated with inductance we can determine each of these components by simply measuring primary voltage (V_P), primary current (I_P) and primary real power (W) and using the following primary circuit relationships:

Parameter	Units	Equation
Real Power	W	$P_P = \frac{V_P^2}{R_C}$
Apparent Power	VA	$S_P = V_P . I_P$
Reactive Power	VAr	$Q_P = \sqrt{\left(S_P^2 - P_P^2\right)}$
Reactive Power	VAr	$Q_P = \frac{V_P^2}{X_M}$

Repeat the test outlined in Experiment 1 but this time record primary voltage (V_P), primary current (I_P) and primary real power (P_P). From test results and above equations determine values for R_C and X_M:

Measured Parameter	**Value**	**Units**
Primary Voltage (V_P)	**30.21**	**V**
Primary Current (I_P)	**0.101**	**A**
Primary Real Power (P_P)	**0.859**	**W**

Note: the Power Meter current and power values may be in milliamps and milliwatts

Calculated Parameter	**Value**	**Units**
Primary Apparent Power (S_P)	**3.05**	**VA**
Primary Reactive Power (Q_P)	**2.93**	**VAR**
Magnetising Reactance (X_M)	**311**	**Ω**
Iron Loss resistance (R_C)	**1062**	**Ω**

Experiment 2B: Short Circuit Test (to determine R_{1eq} and X_{1eq})

In this experiment (see next page for setup) the secondary winding is short circuit ($Z_{1s'} = 0\Omega$) and as a result I_1 current will flow in the primary. Under short circuit conditions I_1 is very much bigger than magnetising and iron loss currents and so these elements can be ignored and the equivalent circuit simplifies to that shown on figure 5.

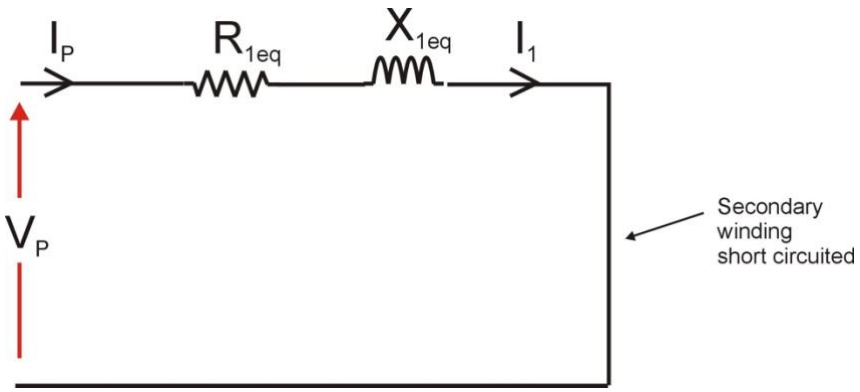

Figure 5: Short Circuit Test Equivalent Circuit

Once again we have one resistive component (R_{1eq}) and one inductive component (X_{1eq}) so knowing that **REAL** Power is associated with the resistance and **REACTIVE** power is associated with inductance we can determine each of these components by simply measuring primary voltage (V_P), primary current (I_P) and primary real power (P_P) and using the following relationships:

Parameter	Units	Equation
Real Power	W	$P_P = I_P^2 . R_{1eq}$
Apparent Power	VA	$S_P = V_P . I_P$
Reactive Power	VAr	$Q_P = \sqrt{\left(S_P^2 - P_P^2\right)}$
Reactive Power	VAr	$Q_P = I_P^2 . X_{1eq}$

The experimental setup is shown on figure 6. Note that this test is carried out at **reduced** supply voltage so ensure the AC power supply voltage is set to **zero** before switching on.

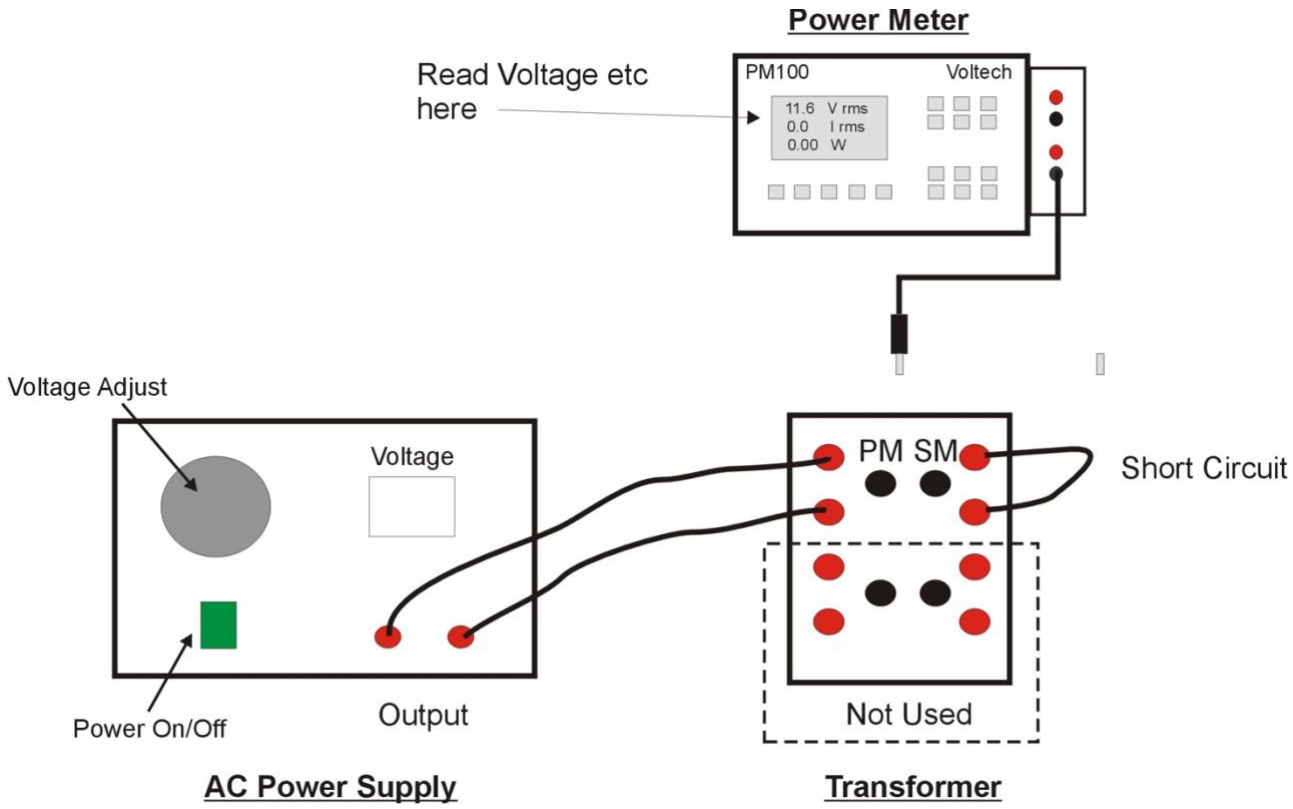

Figure 6: Short Circuit Test Setup

Experimental Procedure (GET DEMONSTRATOR BEFORE TURNING ON):

1. Turn off the AC power supply and set the AC voltage to zero.
2. Connect a short circuit wire across the transformer Secondary winding as shown on Figure 6.
3. Connect the Power Meter to the Secondary monitoring point (SM) on the transformer.
4. Turn on the AC power supply and slowly increase the voltage until approximately 3A is measured by the Power Meter in the secondary winding.
5. Connect the Power Meter to the Primary monitoring point (PM) on the transformer and record voltage (V_P), current (I_P) and power (P_P).
6. Reduce the AC voltage to zero and turn off the AC power supply.

From the test results and above equations determine values for R_{1eq} and X_{1eq}:

Measured Parameter	Value	Units
Primary Voltage (V_P)	**2.275**	**V**
Primary Current (I_P)	**1.258**	**A**
Primary Real Power (P_P)	**2.845**	**W**

Note: If Primary Real Power > Primary Apparent Power then assume $Q_P = 0$ (this is a result of some assumptions in the equivalent circuit which are not valid for a transformer this size)

Calculated Parameter	Value	Units
Primary Apparent Power (S_P)	**2.862**	**VA**
Primary Reactive Power (Q_P)	**0.311**	**VAR**
Winding Resistance (R_{1eq})	**1.800**	**Ω**
Leakage Reactance (X_{1eq})	**0.197**	**Ω**

From your results fill in the component values of the complete transformer equivalent circuit shown on Figure 7. Also note that the value of $Z_{1s'}$ (secondary load impedance REFERRED TO THE PRIMARY SIDE) is equal to the (turns ratio)^2 x Secondary Impedance (Zs). Calculate the value for (turns ratio)^2 based on your measured value for turns ratio and put this value in the box below $Z_{1s'}$ in Figure 7.

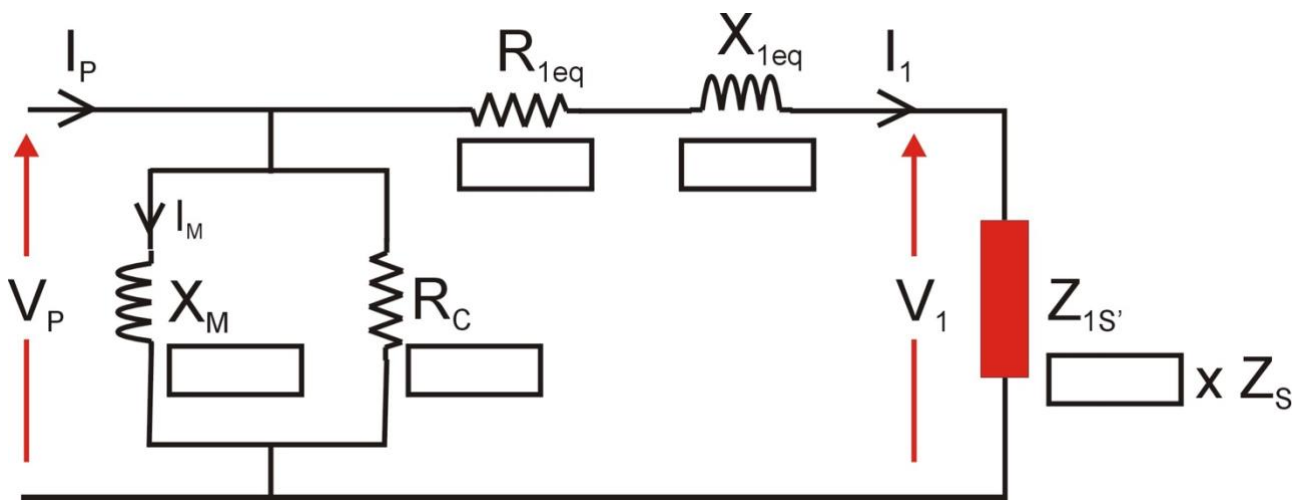

Figure 7: Measured Transformer Equivalent Circuit

Experiment 3: Using the Equivalent Circuit to Predict Transformer Performance

The purpose of the equivalent circuit is to be able to predict transformer performance (output voltage, current, power, efficiency etc) for a given load. You can therefore use your equivalent circuit to calculate transformer performance for a given secondary load impedance and input voltage.

Theory:

Calculate the following parameters using your equivalent circuit for a primary voltage (V_p) of 30V and a 6Ω load resistance (Z_s) connected across the secondary winding:

1. Output Current (I_S)
2. Output Voltage (V_S)
3. Output Power
4. Voltage Regulation
5. Transformer Copper Loss (W) (hint: associated with R_{1eq})
6. Transformer Iron Loss (W) (hint: associated with R_c)
7. Transformer Efficiency

Steps:

1. Calculate $Z_{1s'}$ based on (turns ratio)^2 x 6Ω
2. Using the equivalent circuit on Figure 7 calculate I_1 (hint: ignore X_m and R_c components)
3. Using the equivalent circuit on Figure 7 calculate V_1 (hint: $V_1 = I_1 . Z_{1s'}$)
4. The secondary output voltage and current are derived from I_1 and V_1 through the following relationships (where Np/Ns is the turns ratio):

$$V_S = \frac{N_S}{N_P}.V_1 \qquad I_S = \frac{N_P}{N_S}.I_1$$

Parameter	Value	Units
Output Current (I_S)	**1.8**	**A**
Output Voltage (V_S)	**10.8**	**V**
Output Power	**19.44**	**W**
Voltage Regulation *1	**3.74**	**%**
Transformer Copper Loss	**0.805**	**W**
Transformer Iron Loss	**0.847**	**W**
Transformer Efficiency *1	**92.17**	**%**

*1 See next page for definitions of Voltage Regulation & Efficiency

Step 1,

$$Z_{1s}' = (2.69)^2 \cdot 6\Omega = 43.42\,\Omega$$

Step 2,

$$Z_{TOT} = R_{1eq} + X_{eq} + Z_{1s}'$$
$$= 7.800\Omega + j0.797 + 43.42\Omega$$
$$= 44.86\,\Omega + j0.797$$
$$= \underline{44.86 \angle 0.25^\circ}\,\Omega$$

$$I_1 = \frac{V_P}{Z_{TOT}} = \frac{30\,V}{44.86 \angle 0.25^\circ} = \underline{0.669 \angle -0.25^\circ\ A}$$

Step 3,

$$V_1 = I_1 \cdot Z_{1s}' = (0.669 \angle -0.25^\circ\ A) \cdot 43.42 = \underline{29.05 \angle -0.25^\circ\ V}$$

Step 4,

$$I_s = 2.69 \cdot I_1 = \underline{1.800 \angle -0.25^\circ}$$

$$\underline{V_s = \frac{1}{2.69} \cdot V_1 = 10.80 \angle -0.25^\circ}$$

Output power $= V_s \cdot I_s = \underline{19.44 \angle -0.5^\circ}$

Voltage regulation $= \dfrac{11.22 - 10.8}{11.22} \times 100\% = \underline{3.74\%}$

Iron Loss $= \dfrac{V_P^2}{R_C} = \dfrac{30^2}{1062} = \underline{0.847\ W}$

Copper Loss $= I_1^2 \cdot R_{1eq} = \underline{0.806W}$

Efficiency $= \dfrac{19.44}{19.44 + 0.847 + 0.805} = \underline{92.17\ \%}$

Transformer Regulation & Efficiency

We'll leave the equivalent circuit for the time being and now look at transformer operation with an actual load connected to the secondary winding. Invariably we want the load to dissipate real power so we will represent this with a simple value of resistance. When we investigate transformer performance we are primarily interested in the following:

- Transformer Voltage Regulation
- Transformer Efficiency

Voltage Regulation is a measure of how well the output voltage (V_S) remains constant from no load (open circuit) to full load (maximum I_S). It is expressed mathematically as:

$$\text{Voltage Regulation} = \frac{V_{SOC} - V_{SL}}{V_{SOC}} \times 100\%$$

where:

V_{SOC} = Open Circuit Secondary Voltage
V_{SL} = Secondary Voltage under load

Given that we want the output voltage to remain as close as possible to the open circuit voltage we therefore want the Regulation value to be as low as possible (typically <5%).

Transformer Efficiency is expressed mathematically using any one of the following equations:

$$\text{Efficiency} = \frac{\text{Output Power (W)}}{\text{Input Power (W)}} \times 100\%$$

$$\text{Efficiency} = \frac{\text{Output Power (W)}}{\text{Output Power (W) + Losses (W)}} \times 100\%$$

$$\text{Efficiency} = \frac{\text{Input Power (W) - Losses (W)}}{\text{Input Power}} \times 100\%$$

The aims of the following series of tests is to measure performance at four different resistive load points, and from the results calculate the Voltage Regulation and Efficiency at each point. The experimental set up is shown on figure 8. The general idea is to measure input and output voltages, currents and powers over the load range for a constant input voltage (V_P).

The Resistor Network has four IDENTICAL 24Ω resistors and we can PARALLEL these to give us the following four output impedances:

Load Point	Parallel Resistors	Resistance Z_S
1	1	24Ω
2	2	12Ω
3	3	8Ω
4	4	6Ω

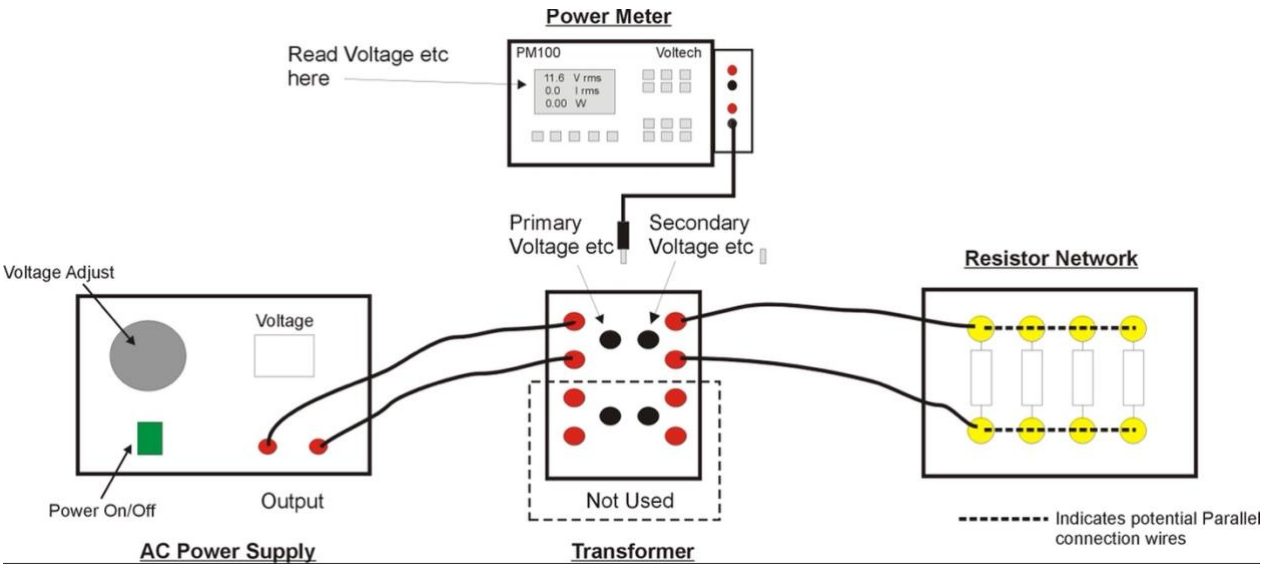

Figure 8: Transformer Regulation & Efficiency Tests

Experimental Procedure:

1. Turn off the AC power supply and set the AC voltage to zero.
2. Connect a single resistor (Load Point 1) in the Resistor Network to the Secondary winding as shown on Figure 8.
3. Connect the Power Meter to the Primary monitoring point (PM) on the transformer.
4. Turn on the AC power supply and adjust until approximately 30V is displayed on the Power Meter.
5. Measure primary circuit parameters: voltage (V_P), current (I_P) and real power (P_P)
6. Connect the Power Meter to the secondary monitoring point (SM) on the transformer.
7. Measure secondary circuit parameters: voltage (V_S), current (I_S) and real power (P_S).
8. Turn off the AC power supply.
9. Connect another Resistor Network resistor in parallel (Load Point 2) and repeat test. (note: adjust AC power supply voltage to maintain constant V_P as much as possible)
10. Repeat for Load Points 3 and 4.
11. Repeat for Open Circuit Secondary condition (no resistors connected) but only measure the Secondary voltage (V_{SOC}).

From your test results and associated equations calculate the Voltage Regulation and transformer Efficiency at each of the four load points:

V_{SOC}	**11.17**

Load Point	V_P	I_P	P_P		V_S	I_S	P_S		Regulation	Efficiency
	(V)	(A)	(W)		(V)	(A)	(W)		(%)	(%)
1	**30.03**	**0.221**	**6.00**		**11.09**	**0.459**	**5.10**		**0.716**	**85.0**
2	**30.01**	**0.377**	**10.98**		**10.98**	**0.906**	**9.94**		**1.70**	**90.5**
3	**30.06**	**0.539**	**15.96**		**10.87**	**1.348**	**14.68**		**2.69**	**92.0**
4	**30.04**	**0.695**	**20.68**		**10.76**	**1.766**	**18.96**		**3.67**	**91.7**

From the results plot Secondary Voltage (V_S) and Efficiency against Output Current I_S (note using a false zero on the Y axis values is recommended to maximise resolution):

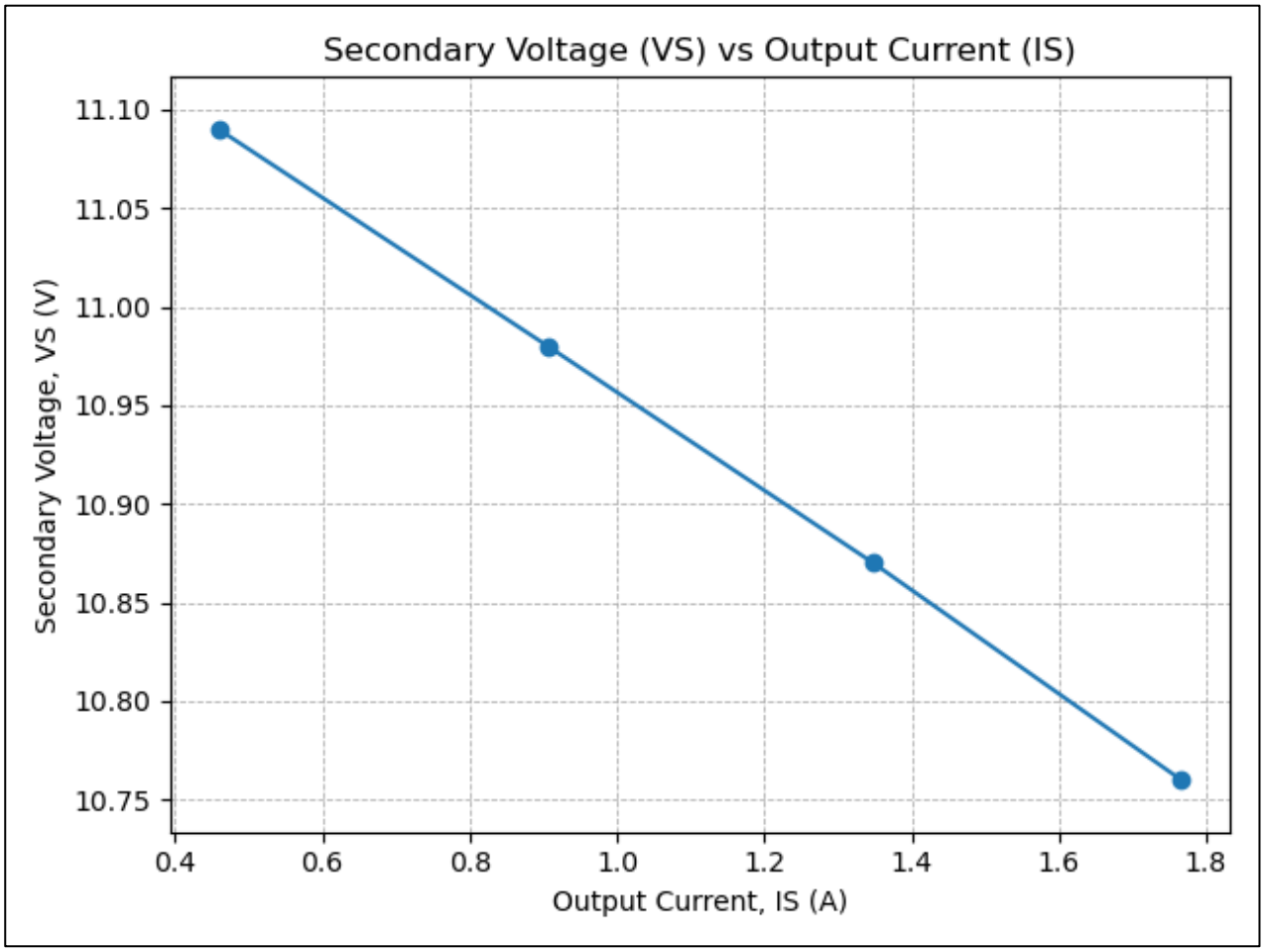

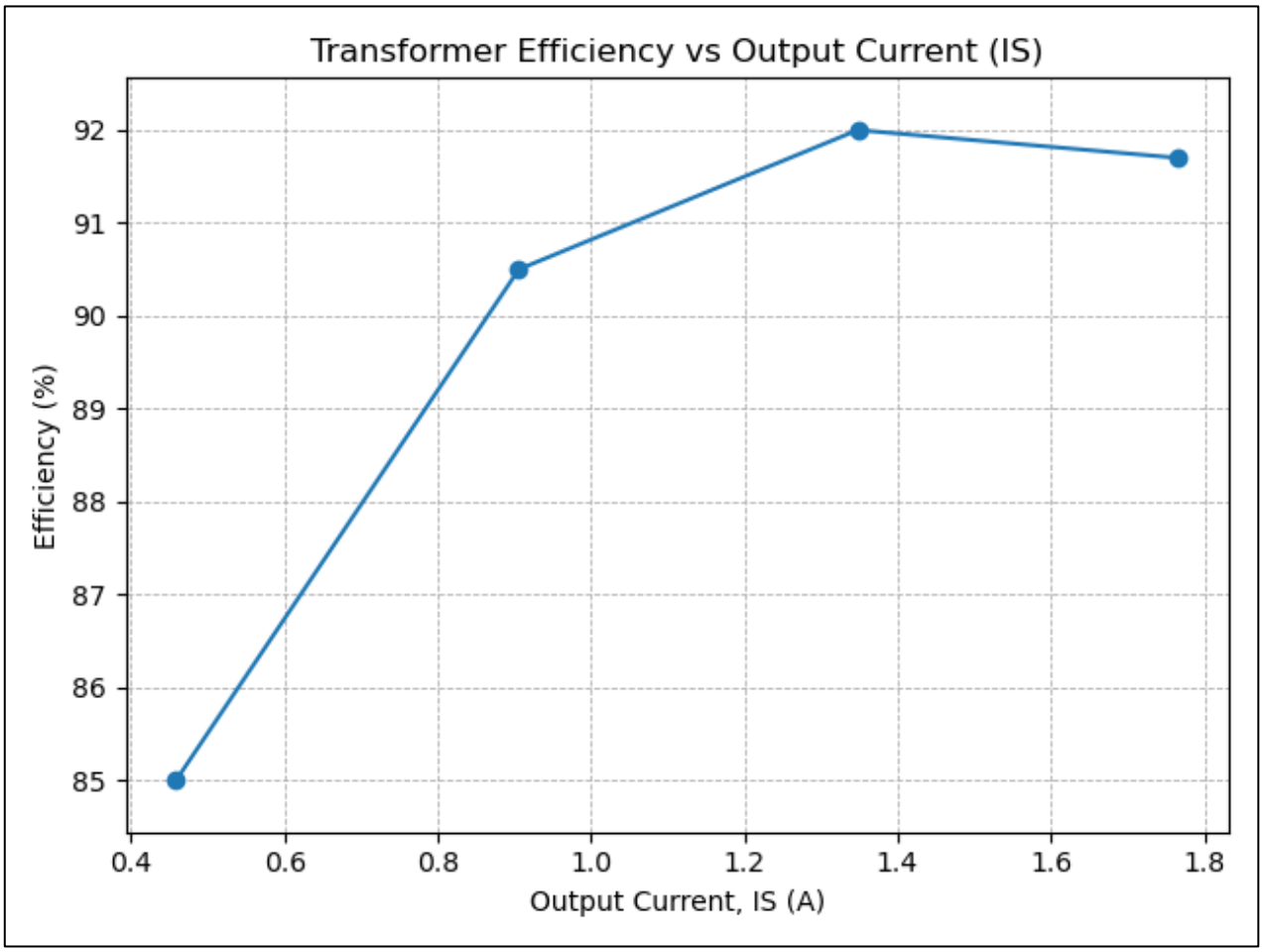

Analysis of Results and Comparison with Theory

Using your results for load point 4 (6Ω load) complete the following table of comparison between your measured results and your theoretical values calculated earlier from your equivalent circuit:

Parameter	Measured	Theory	Units
Output Current (I_S)	**1.766**	**1.8**	**A**
Output Voltage (V_S)	**10.76**	**10.8**	**V**
Output Power	**18.96**	**19.44**	**W**
Voltage Regulation	**3.67**	**3.74**	**%**
Transformer Efficiency	**91.68**	**92.17**	**%**

Experiment 4: Transformer Voltage and Current Limits

The transformer like any other piece of electrical equipment has limitations on the maximum voltage and current which it can operate at.

The current limit is set by the maximum I^2R loss which can be dissipated in the transformer windings as this produces heat which in turn causes a temperature rise in the machine windings. If the winding temperature exceeds the maximum temperature of the winding insulation (eg Class F insulation has T_{max} = 155°C) then the insulation will break down and the windings will be permanently damaged.

The voltage limit is set be the maximum flux density (B_{max}) in the transformer core which if exceeded will result in magnetic saturation of the core which in turn leads to increased harmonics (distortion) in the magnetising current. This distorted magnetising current leads to significant increase in the power loss (both copper and iron loss) in the transformer and associated wiring, and can also distort the supply voltage – obviously things to be avoided!

Transformer Current Limit Calculation

A transformer is typically specified with a Voltage limit and a VA limit. This transformer has the following values:

Primary Voltage Limit	36V
Primary VA Limit	100VA

Given the relationship between Voltage, Current and Apparent Power, can you suggest a value for the Current Limit:

Primary Current Limit	**2.78 A**

A more generic term is to determine the Current Density (A/mm^2) limit, where the mm^2 refers to the cross section of the wire carrying the current. Given that the primary wire has a diameter of 1.12mm calculate the Current Density Limit:

Primary Current Density Limit	**2.82 Amm^{-2}**

It would be a worthwhile exercise to have a look at some literature to determine if this Current Density Limit is typical for a machine of this type.

Transformer Voltage Limit Experiment

As outlined above if the primary voltage is increased then at some point the magnetic circuit will begin to saturate (see figure 9) resulting in distortion to the magnetising current and increased losses. We can determine the 'knee point' of the BH curve by monitoring the TOTAL HARMONIC DISTORTION (THD) of the primary CURRENT using the Voltech Power Meter. Note that the higher the distortion the higher the value for THD (for an ideal sinusoidal waveform THD = 0%)

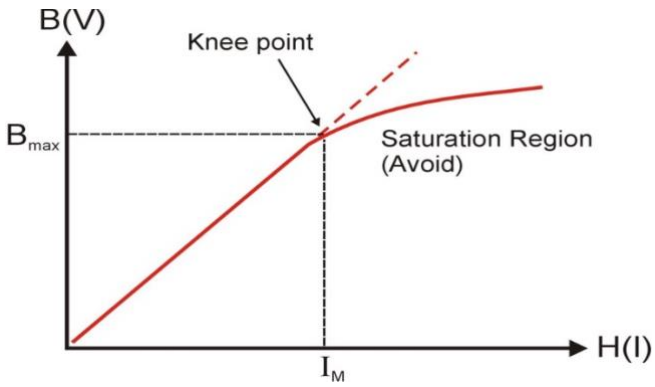

Fig 9: Magnetic core BH Curve

Experimental Procedure:

1. Turn off the AC power supply and set the AC voltage to zero.
2. Disconnect the load from the secondary winding
3. Connect the Power Meter to the Primary monitoring point (PM) on the transformer.
4. Ask demonstrator how to set the Voltech Power Meter to measure primary current THD
5. Measure the primary current and primary current THD at the following primary voltage values:

Target Primary Voltage (V)	Actual Primary Voltage (V)	Primary Current (A)	Primary Current THD (%)
5	**5.09**	**0.0169**	**2.24**
10	**10.12**	**0.0294**	**4.21**
15	**15.09**	**0.0424**	**6.64**
20	**20.15**	**0.0574**	**9.39**
25	**25.00**	**0.0754**	**12.84**
30	**30.08**	**0.1022**	**18.38**
35	**35.10**	**0.1473**	**28.14**
40	**40.14**	**0.3018**	**54.29**
45	**45.09**	**1.5420**	**93.47**

Plot graphs of Primary Current (X Axis) versus Primary Input Voltage (Y Axis), and Primary Current THD (x axis) versus Primary Input Voltage (y axis). From these determine the primary voltage at the 'knee point' of the curve.

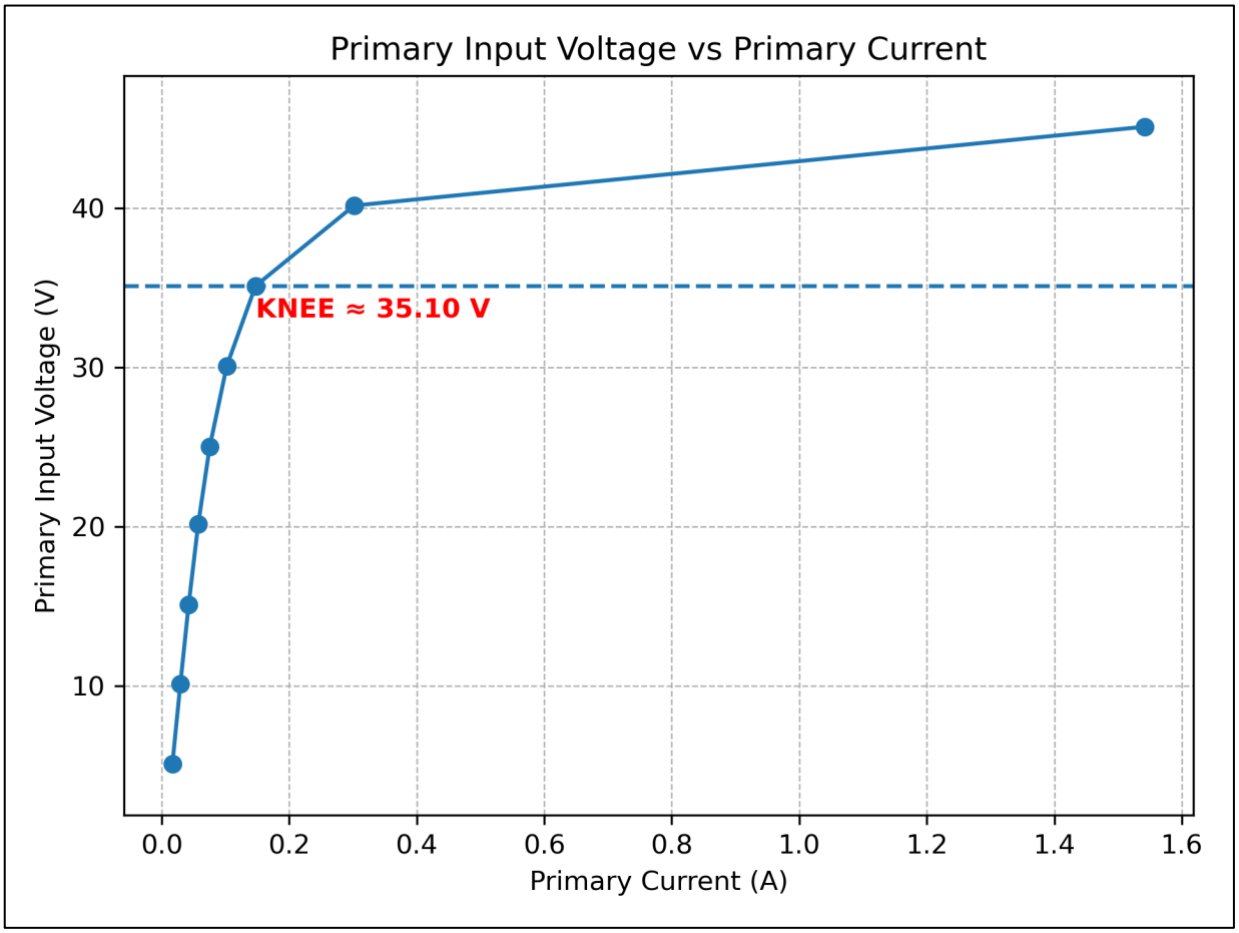
Primary Input Voltage vs Primary Current
KNEE ≈ 35.10 V
Primary Input Voltage (V)
Primary Current (A)
10
20
30
40
0.0
0.2
0.4
0.6
0.8
1.0
1.2
1.4
1.6

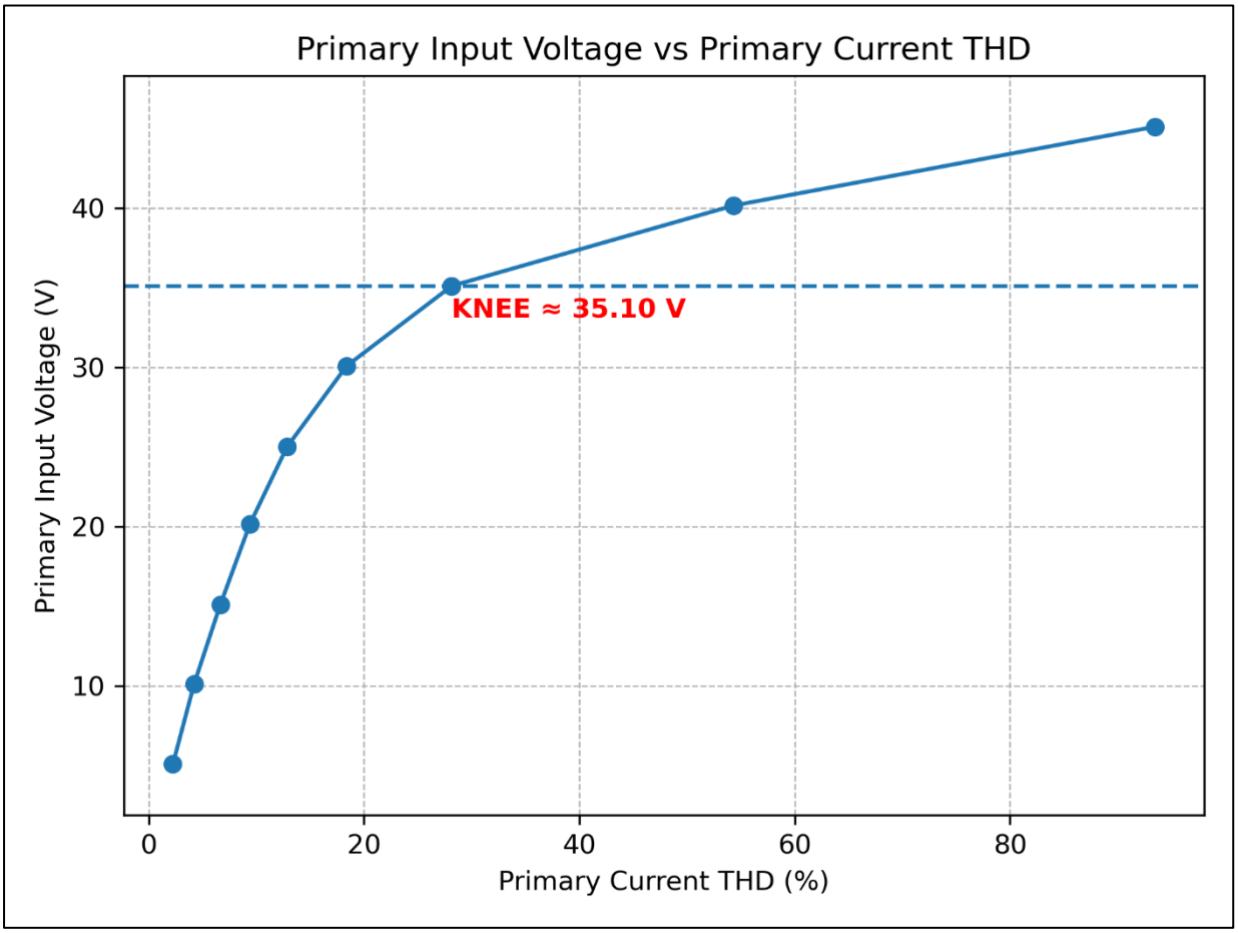
Primary Input Voltage vs Primary Current THD
KNEE ≈ 35.10 V
Primary Input Voltage (V)
Primary Current THD (%)
10
20
30
40
0
20
40
60
80

The corresponding Flux Density (Bmax) at this knee point can be calculated from the following relationship and values:

Voltage – Flux Density Relationship	$V_p = \sqrt{2}.\pi.f.N_p.B.A_C$ where: V_p = Primary Voltage (V) f = Supply Frequency (Hz) N_p = Number of primary turns B = Flux Density (T) A_c = Cross-sectional area of iron core (m^2)
f	50Hz
N_p	170
A_c	640mm^2
Vp	35.10 V

Calculated B_{max}	**1.452 T**

Again it would be worthwhile looking up relevant literature to confirm this calculation.

University of Glasgow
School of Engineering

Power Engineering 3 ENG3041

Lab 3: 3-Phase Induction Motor

Version 3

Student Name: **Daniel Borkovec**

Matric No: **2941124B**

Introduction

In this experiment you will study the performance a squirrel-cage 3-phase induction motor. These motors are very important for many applications and absorb round about 45 % of all energy generated. They come in many sizes, from only a few watts up to several megawatts, and in many shapes, they can have the rotor rotating around the stator and different methods of cooling (e.g., TEFC – totally enclosed fan cooled, IP 55 (ingress protection, outdoor use) is very common, large machines can be water or oil cooled, drip-proof machines (IP 20, indoor use only) will have an internal fan and venting for air inlet and outlet and a fully submersible motor will be IP 68).

The 4 pole machine you are using is a total enclosed machine with natural convection cooling. It is low voltage (an educational machine designed to work at less that 50 V line to line) however it can be connected in various ways in a similar way to a normal 3-phase motors working at higher voltages.

We will look at the performance of the machine and carry out the following tests and measurements:

- Direction test
- No load test
- Locked rotor test
- Calculation of equivalent circuit parameters
- Obtains torque/speed and current Speed curves from equivalent circuit parameters
- Load test
- Comparison of results with simulation

Assessment

The 3 laboratory sessions account for 10% of your final mark in Power Engineering 3. You should have with you a bound laboratory book (with graph paper). Record ALL your measured results and any subsequent calculations in your bound laboratory book during the laboratory session, also fill out the necessary results in this lab sheet (this makes it easy for me to check your results during the session).

At some point after the lab session you need to write up the results (neatly!) and complete the associated analysis/theory sections before handing in your lab books before the end of the semester.

Note that you will not be assessed during the laboratory session so please communicate freely with supervisor/demonstrators – we are here to help you obtain accurate results and to help with any questions you have relating to the associated theory.

Experiment 1: Equipment Test

Warning *– please get your connections checked by a demonstrator when first switching on and if in doubt. Take care when using the machinery – it is low power and low voltage but a nasty accident can still occur if you get things caught in it. Long hair should be tied back, ties should be removed or tucked away and objects such as fingers or pens should not be put into the rotating machinery.*

Look at the equipment in front of you. The main piece of equipment is the induction motor and eddy current brake. The motor is on the left hand side and the eddy current brake is on the right. The eddy current brake is solely for loading the machine and is simply controlled from the dc power supply connected to it – increase the voltage and the load will increase. Now look at the 3-phase induction motor. At the non-drive end you will find a connection panel with six terminals and a connection for a thermistor. Ignore the thermistor connection and study the six terminals. These are labelled U1, U2, V1, V2, W1 and W2 which represent the three different phases. These can be connected in two different ways – in either star or delta. In the space below sketch the connections that you think represent a star and a delta connection. Get this checked by a demonstrator. Take U2, V2 and W2 as the star point connections.

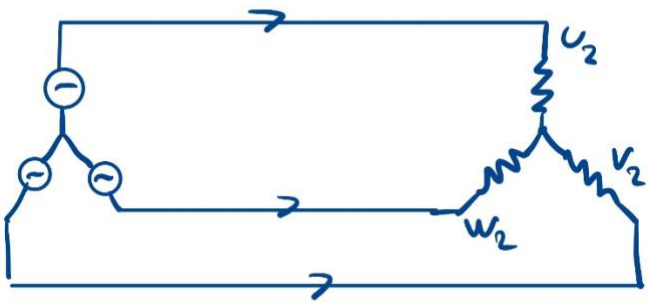

Star Connection

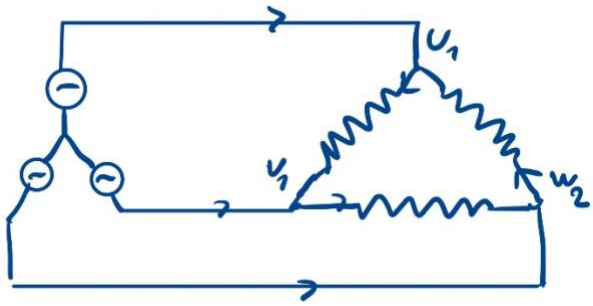

Delta Connection

Look at the other equipment you have in front of you. Identify the low voltage 3-phase supply (not always on bench, it is connected via the DOL starter), the 3-phase power meter and the 3-phase high resistance starter. This machine can be started by direct connection to the supply (called a dol

start – direct on-line start).

Inspect the plate on the induction motor. Rating plates are very important so never remove because it is then difficult to identify what the machine actually is!

Write down the details on the plate below:

Motor REF: FM9981

Input: 41.5V 3PH 1.8A

Output: 50W 1400rpm

AUTO RESET PROTECTOR

Answer these questions:

1. Calculate the Synchronous Frequency using the following equation:

   $N_{sync} = 120 \times$ supply frequency $f_s \div$ pole number P.

N_{sync}	**1500**	rpm

2. Given that Mechanical Power = Torque × ω (where ω is the speed in rad/sec) – and assuming the speed is close to the synchronous speed and convert to rad/sec (multiply by 2π/60). Calculate the rated torque:

Rated Torque	**0.318**	Nm

In reality the rated torque will be a bit higher than this because the motor will run at a speed a little below the synchronous speed.

Experiment 2: Direction Test

The 3-phase supply sets up a rotating magnetic field inside the machine and the direction is dictated by the phase sequence. To make the motor rotate in the opposite direction it is a simple matter to change two phases round (which reverses the phase sequence). In addition we wish to run the motor as lightly loaded as possible so we want to mechanically disconnect the eddy-current brake.

Procedure

Push the eddy current brake away from the motor - it should slide off the bed. Connect the motor up as a STAR connection; check the connection with a demonstrator.

Start with a DOL starter. Note the direction. Now verify that the motor will rotate in the opposite direction by stopping the machine, turning off the supply, and reconnecting with two phases switched. Restart and observe the rotation.

Does the motor go in opposite directions?	**Yes**

What speed does the motor run at in both directions?	Clockwise& Counterclockwise both: **1495 RPM**

For the rest of the experiment we will keep the motor running in the same direction and in star connection. For uniformity keep the motor connected so that it runs in the clockwise direction as you look from the drive end of the machine. Switch off and reconnect if necessary.

Experiment 3: No Load Test

We will now do a no load test. This is a simple test were we measure the input voltage, current, power and reactive power or power factor when the motor is running light. Therefore, start the motor and measure these parameters. The digital power meter has several pages so cycle round by pressing the red button to find them – look carefully at the units.

Parameter	Value	Units
Line Voltage (eg V_{RY})	**43.6**	V
Line Current (eg I_R)	**1.79**	A
Total (3ph) input real Power	**27**	W
Total (3ph) input reactive Power	**131**	VAr
Power Factor	**0.2**	

Theory and Calculation

The induction motor essentially works as a transformer. The primary is the stator and the secondary is the aluminium cage on the rotor. At the synchronous speed the rotor is rotating at the same speed as the magnetic field set up by the stator current and therefore no current is induced into the rotor. As the rotor slows emfs are induced into the rotor cage, producing rotor current; interaction between the stator magnetic field and the rotor current will produce torque. Therefore we term the difference between the synchronous speed and the rotor speed as the slip which is given by

$$\text{slip } s = \frac{N_{sync} - N_r}{N_{sync}} \tag{1}$$

At standstill the slip is 1 and at synchronous speed the slip is 0. We can predict the performance of the machine by use of a per-phase equivalent circuit as shown below.

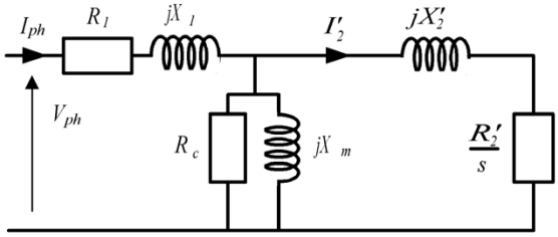

Since it is per-phase it should be excited by the phase voltage. For a balanced system the phase voltage (which is the voltage of one phase referenced to neutral) is the voltage between two lines divided by the square root of three (this has been covered in lectures!). Therefore

$V_{ph} = \frac{V_{Line}}{\sqrt{3}} =$	**25.17**	V

A simple approximation of the equivalent circuit is to move the magnetizing components to the terminals. This is because the magnetizing components have impedances which are much larger than the resistance and leakage reactances of the stator and rotor. This gives a circuit which looks like

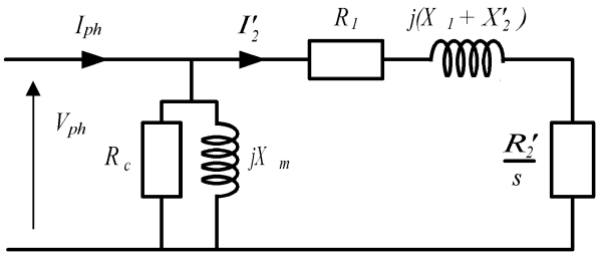

In the open circuit test *s* is approximately zero so that the rotor circuit is blocked. Therefore the equivalent circuit will be simplified to:

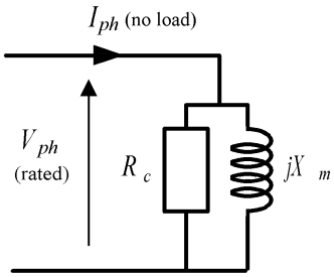

This test should be conducted at rated voltage. From the measurements calculate the values for *Rc* and *Xm*. Remember that power is absorbed by the resistor in the circuit. Reactive power may be a new concept to you. The points to bear in mind is that reactive power is absorbed by an inductor (and generated by a capacitor) and that

Total absorbed inductor reactive power $Q_L = \frac{3(V_{ph})^2}{X_M}$ VAr

Total real power $P_L = \frac{3(V_{ph})^2}{R_C}$ W

The circuit is per-phase so that to get the total power or reactive power then multiply the per-phase values by three. The unit of reactive power is Volt-Amp reaction (VAr).

Parameter	Value	Units
Rc	**70.39**	Ω
Xm	**14.51**	Ω

We now have two values in the per-phase equivalent circuit.

Experiment 4: Locked Rotor Test

This test is to obtain the other values in the equivalent circuit.

Procedure

Ensure that the motor is switched off. First push the eddy current brake back onto the induction motor and get this checked by a demonstrator. There is a slider on the eddy current brake at the shaft end that can be used to lock the rotor so slide this across and ensure that the shaft is locked to the brake.

The locked rotor test should be conducted as close to rated current as possible. The rated phase current is 2A which for a star connected load is the same as the line current. At zero speed full voltage will lead to very high current so this test is performed at reduced voltage by putting the resistor starter in the circuit between the supply and the meter. Get the circuit checked before switching on.

Switch on the system and quickly measure the input parameters then switch off after few seconds:

Parameter	Value	Units
Line Voltage (eg V_{RY})	**29.4**	V
Line Current (eg I_R)	**5.19**	A
Total (3ph) input real Power	**213**	W
Total (3ph) input reactive Power	**155**	VAr

Also measure the torque on the dial at the end of the eddy current brake. Remember that there is a calibration factor as indicated on the brake.

Eddy Current brake Torque	**0.7**	Nm

The starting torque is approximately proportional to the **square** of the applied voltage so calculate the starting torque at full voltage (see Appendix 1). The starting current is approximately proportional to the applied voltage so calculate the starting current at full voltage (see Appendix 1).

Estimated full voltage starting torque	**1.55**	Nm
Estimated full voltage starting current	**7.69**	A

We will use this later. We now wish to obtain the input resistance of the machine so disconnect the supply and measure the resistance of one phase using a multimeter:

Stator phase resistance R1	**1.78**	Ω

Theory and Calculation

In the equivalent circuit, when the slip is 1 (i.e., at start) then rotor circuit has a much lower impedance than the magnetizing circuit so that, at start, it approximates to

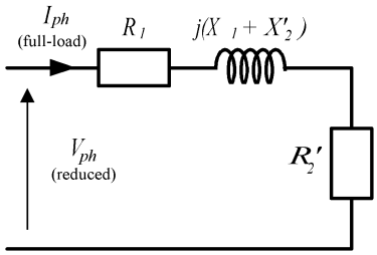

Therefore the values of *X1 + X2'* can be obtained from the input reactive power and current and *R1 + R2'* can be obtained from the input power and current.

Total real power $P_L = 3(I_{Line})^2 (R_1 + R_2')$ W

Total absorbed inductor reactive power $Q_L = 3(I_{Line})^2 (X_1 + X_2')$ VAr

Parameter	Value	Units
X1 + X2'	**1.92**	Ω
R1 + R2'	**2.64**	Ω
R1	**1.78**	Ω
R2'	**0.86**	Ω

Note: We can separate the *R1* and *R2'* using the stator phase resistance measured earlier.

We have now obtained all the circuit parameters for the induction motor. Remove the in-line resistances from the circuit.

Experiment 5: Load tests

Now load the machine by applying various levels of DC current to the Eddy Current Brake.

Fill in the table below with about three points equally spread in terms of torque from the full load current (rated speed) down to near zero current (near synchronous speed)
.

V_{line} #1 (V)	I_{ph} #1 (A)	Pin#1 (W)	Qin#1 (VAr)	P.F.#1	Torque#1 (Nm)	Speed#1 (rpm)	ω_r (rad/sec)	Pout (W)	Efficiency (%)
41.7	1.5	69.9	114	0.52	0.26	1456	152.5	39.65	56.7
43.1	2.23	113	122	0.68	0.74	1405	147.1	108.9	96.4
41.4	3.35	205	127	0.85	1.0	1278	133.8	133.8	65.3
40.0	5.5	366	239	0.83	1.1	135	14.1	15.51	4.3

#1 – these values are measured and the other values are subsequently calculated from the measured results

For one test point (speed) only plot the values of measured torque, output power, efficiency and input current on the relevant simulation graphs and compare the results with the simulation results

For this section, the point investigated was the third data set, meaning when the measured motor speed reached 1278 rpm. The values estimated from the graphs in the appendix are the following:

- **Output power = 140 W**
- **Torque = 1.05 Nm**
- **Input power = 300 W**
- **Current = 3.0 A**
- **Efficiency = 55 %**

(Annotated graphs and the conclusion on the following page)

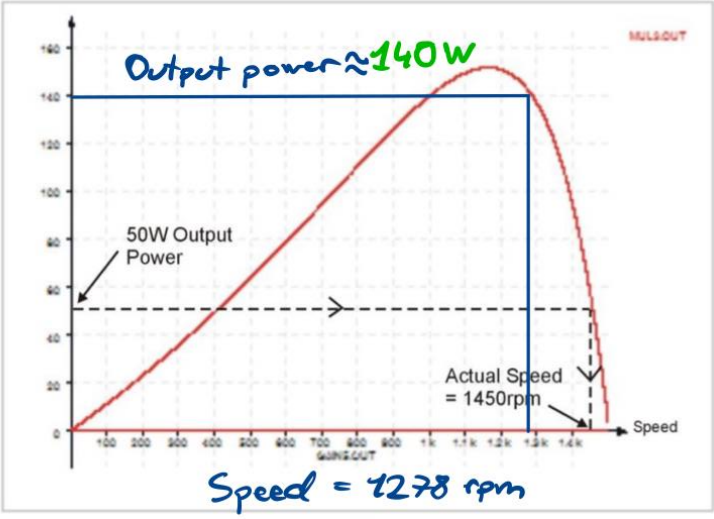

Output Power (W) v Speed

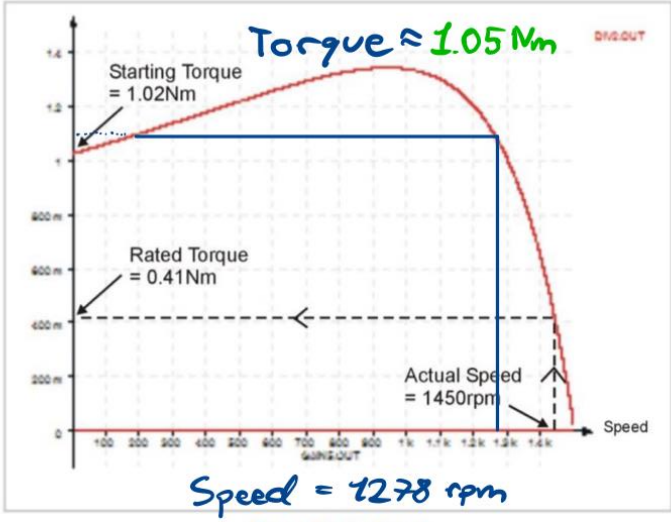

Torque (Nm) v Speed

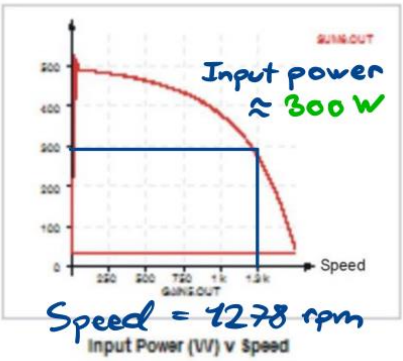

Input Power (W) v Speed

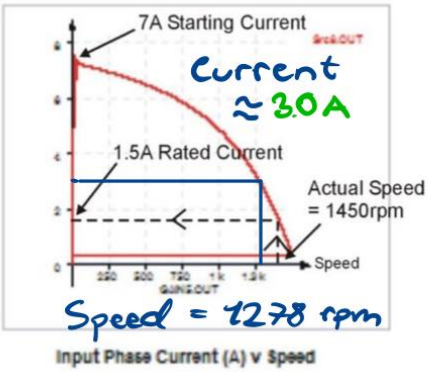

Input Phase Current (A) v Speed

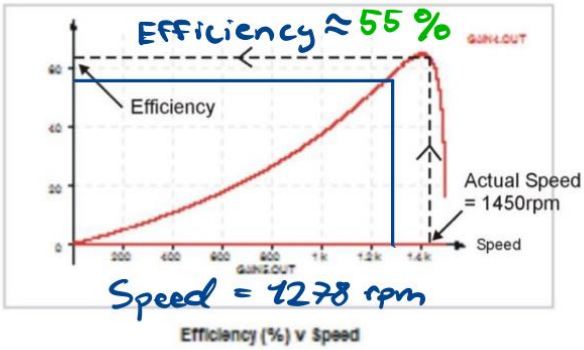

Efficiency (%) v Speed

In conclusion, the data estimated from the plots aligns with the experimental values, with expected deviations due to experimental and plotted errors.

Firstly, the output power and torque estimated from the plots agree with the experimental data very well, being 140 W estimated vs. 133.8 W experimental and 1.05 estimated and 1.0 experimental, respectively. Furthermore, the current also lines up well with the experimental data, where the prediction was 3.0 A and the experimental data showed a current of 3.35 A.

Moreover, a slight deviation was observed in the efficiency and readings, where the efficiency disagreed by about 10%, 55% estimated efficiency and 65.3% experimental. Lastly, the biggest deviation occurred in the input power data, where the prediction and experimental data disagreed by 100 W, 300W predicted vs 205 W experimental. This discrepancy is expected however, as the plots used for the estimation feature the lowest resolution and largest grid spacings of all the data points, meaning the estimated speed to input power relation has the lowest accuracy. Additionally, the measurement instruments and circuit components themselves have tolerances, which may introduce inconsistencies to the experimental data.

Overall, the experimental data and predictions show consistent agreement, with slight acceptable discrepancies caused by measurement and plotted inaccuracies.

Appendix 1

Estimation of Starting Torque at Full Supply Voltage:

$$T_{FV} = \left(\frac{V_{SF}}{V_{SR}}\right)^2 T_{RV}$$

Where:

T_{FV} = Starting Torque at Full Supply Voltage
T_{RV} = Starting Torque at Reduced Supply Voltage
V_{SF} = Full Supply Voltage
V_{SR} = Reduced Supply Voltage

Estimation of Starting Current at Full Supply Voltage:

$$I_{FV} = \left(\frac{V_{SF}}{V_{SR}}\right) I_{RV}$$

Where:

I_{FV} = Starting Current at Full Supply Voltage
I_{RV} = Starting Current at Reduced Supply Voltage
V_{SF} = Full Supply Voltage
V_{SR} = Reduced Supply Voltage

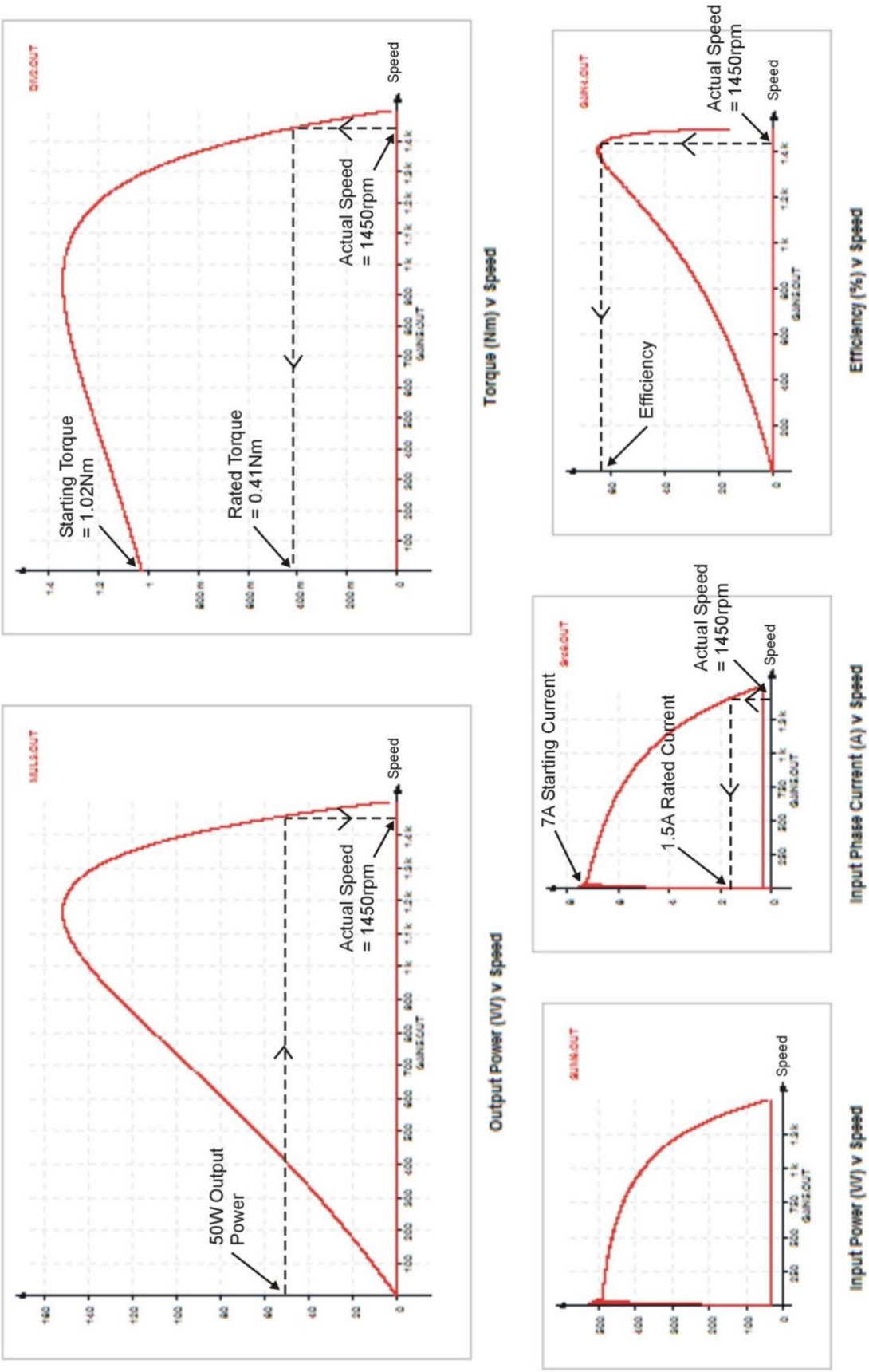

Dr Wenjuan Song
January 2026